Possible Answers
Feb / Mar 2006

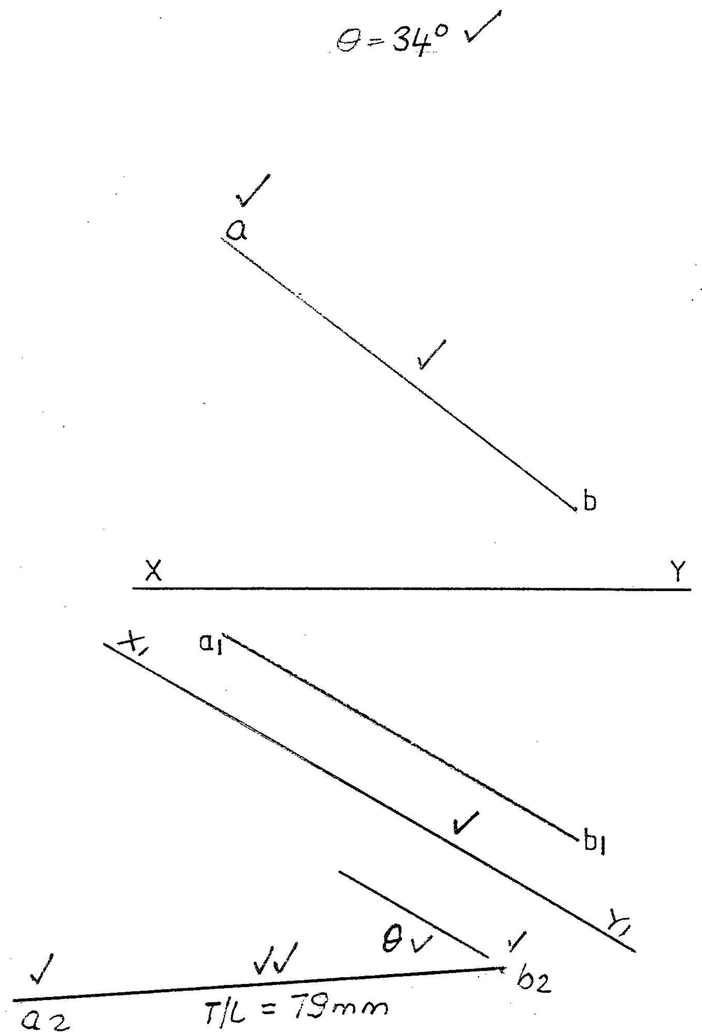

FIG.1.1

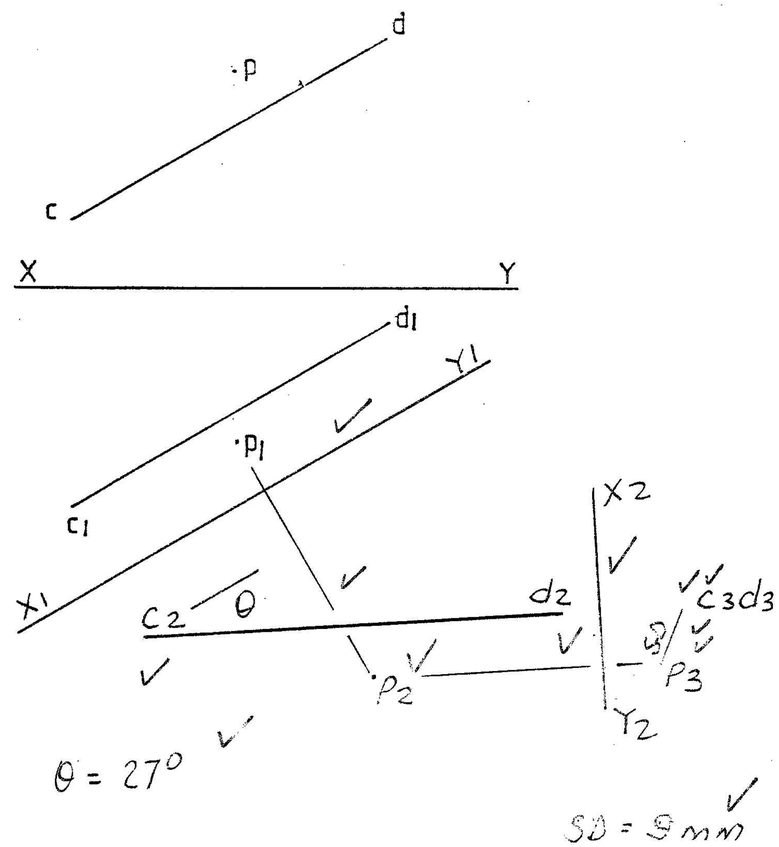

FIG.1.2

Possible Answers
Feb / Mar 2006

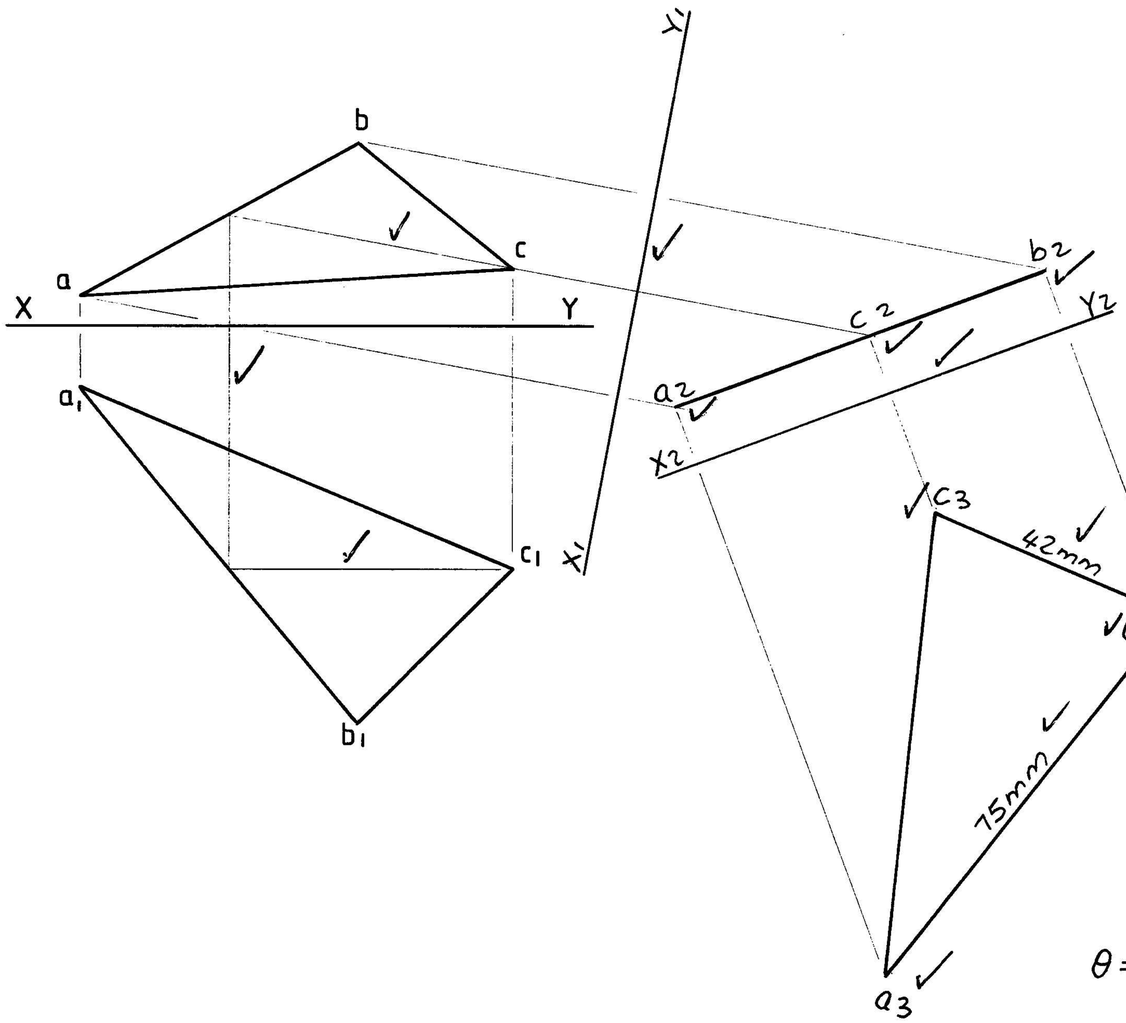

[17]

FIG. 2

Possible Answers
Feb / Mar 2006

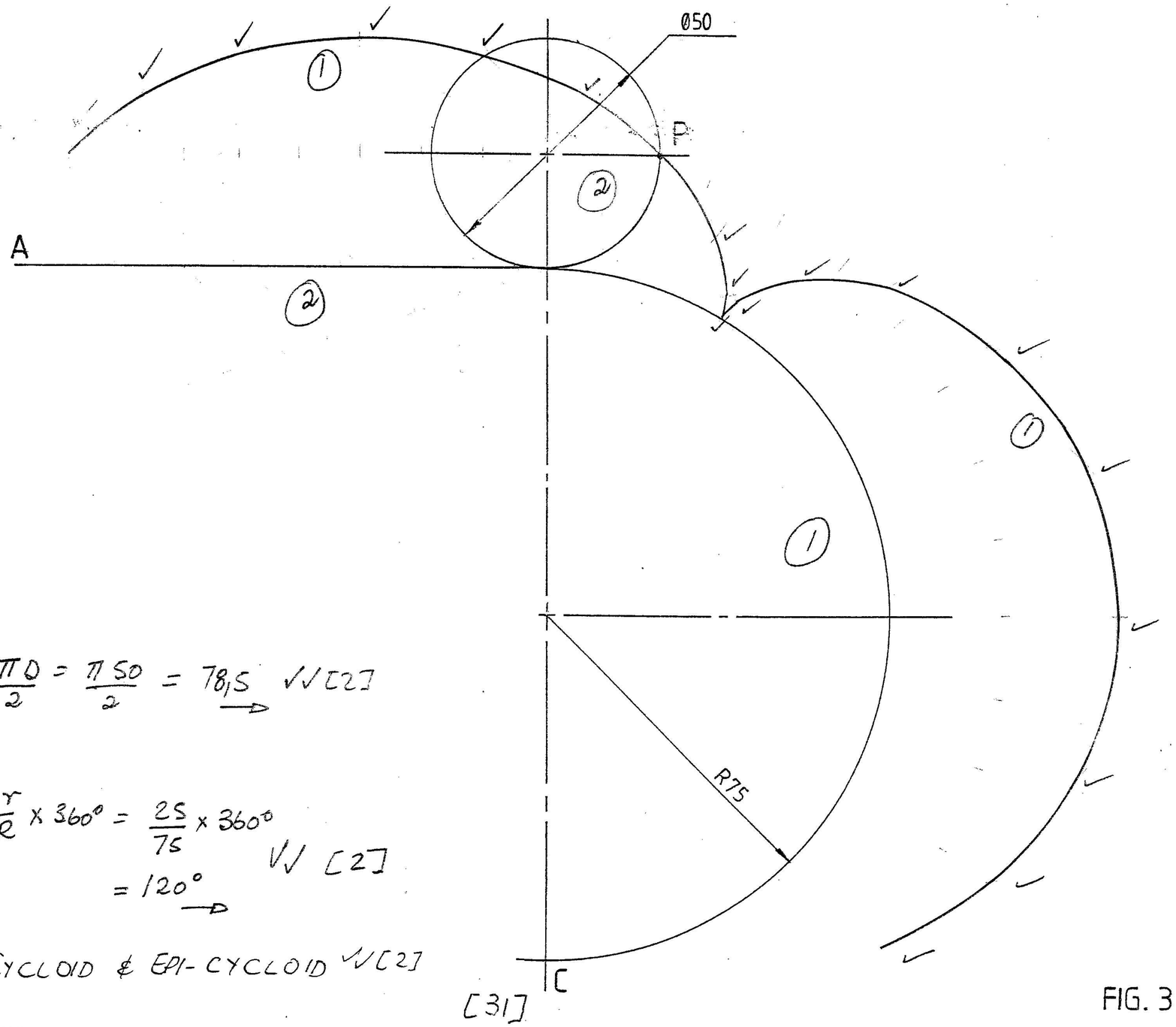

① $\frac{\pi D}{2} = \frac{\pi 50}{2} = 78{,}5$ ✓✓[2]

② $\frac{r}{R} \times 360° = \frac{25}{75} \times 360°$ ✓✓ [2]
$= 120°$

③ CYCLOID & EPI-CYCLOID ✓✓[2]

[31]

FIG. 3

Possible Answers
Feb / Mar 2006

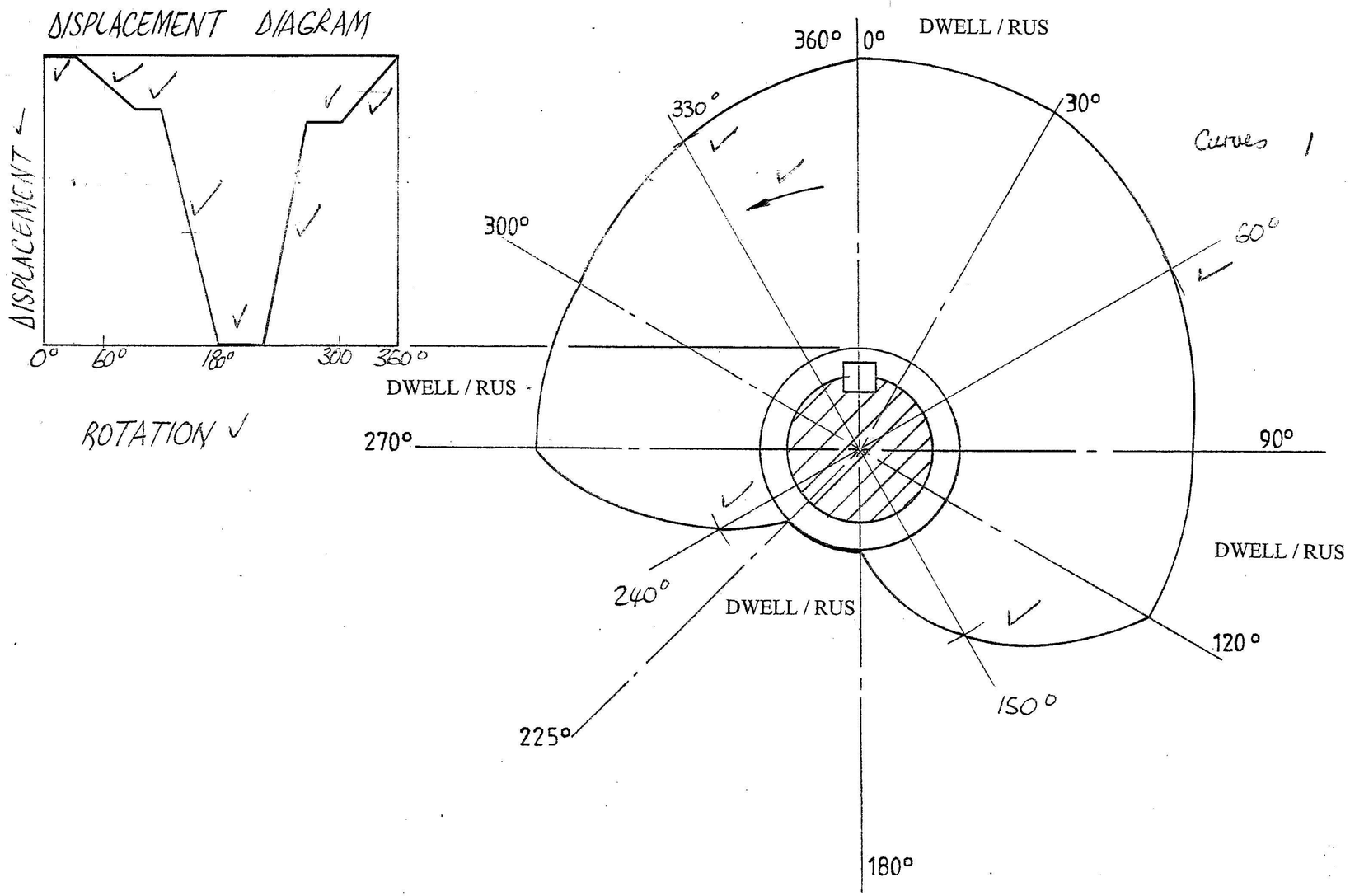

FIG. 4

QUESTION 4
VRAAG

Possible Answers
Feb / Mar 2006

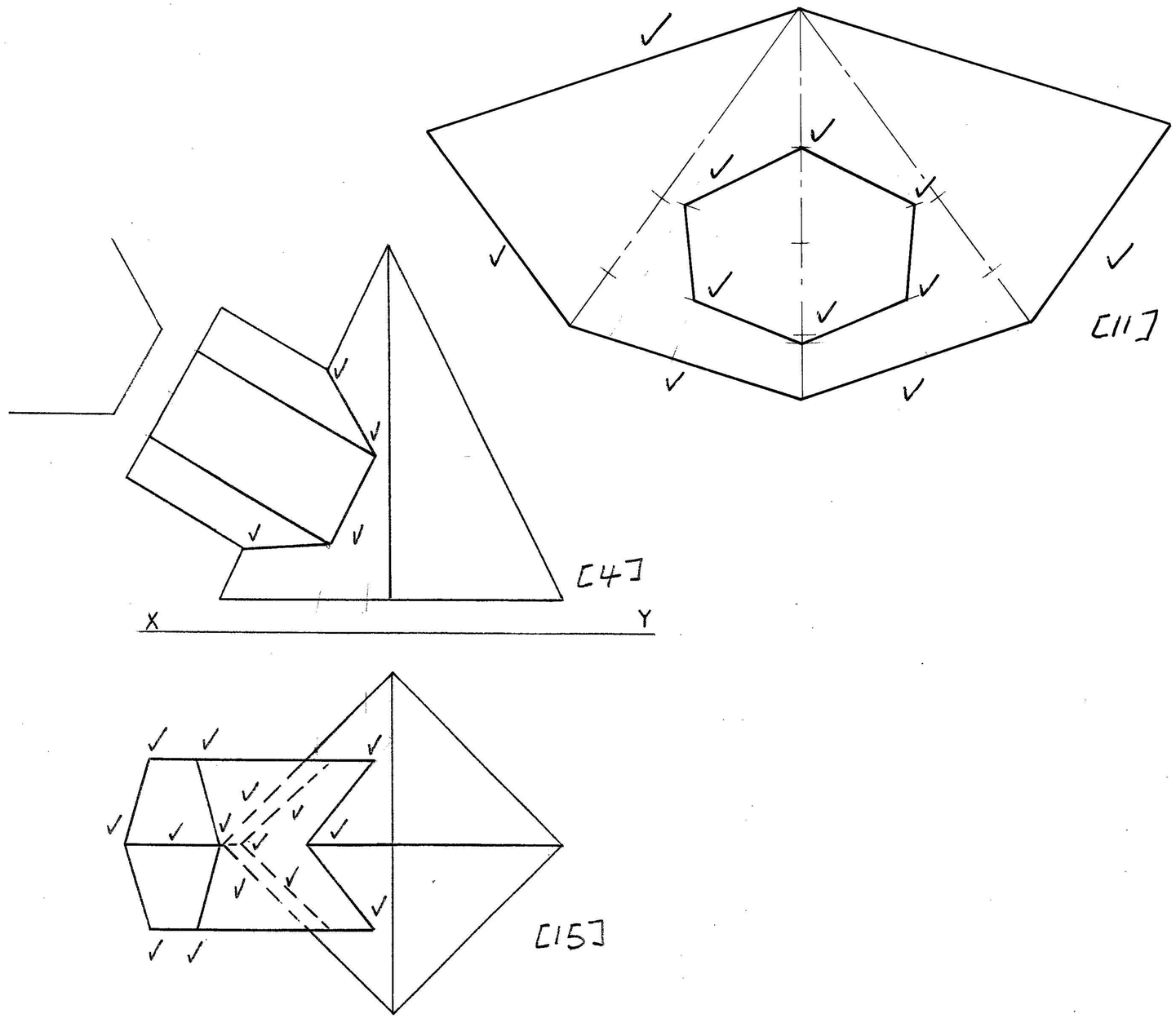

[30]

FIG.5

Possible Answers
Feb / Mar 2006

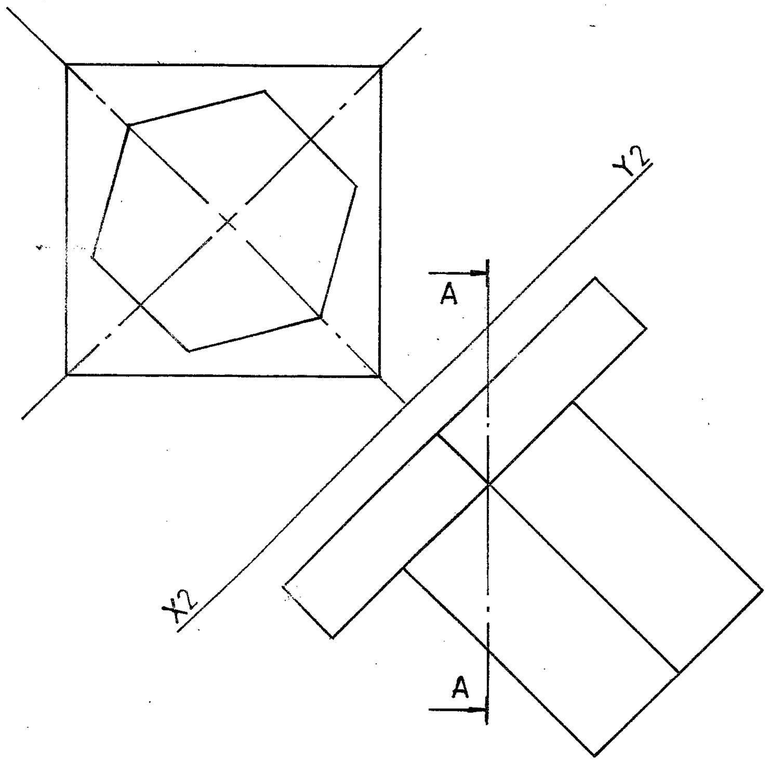

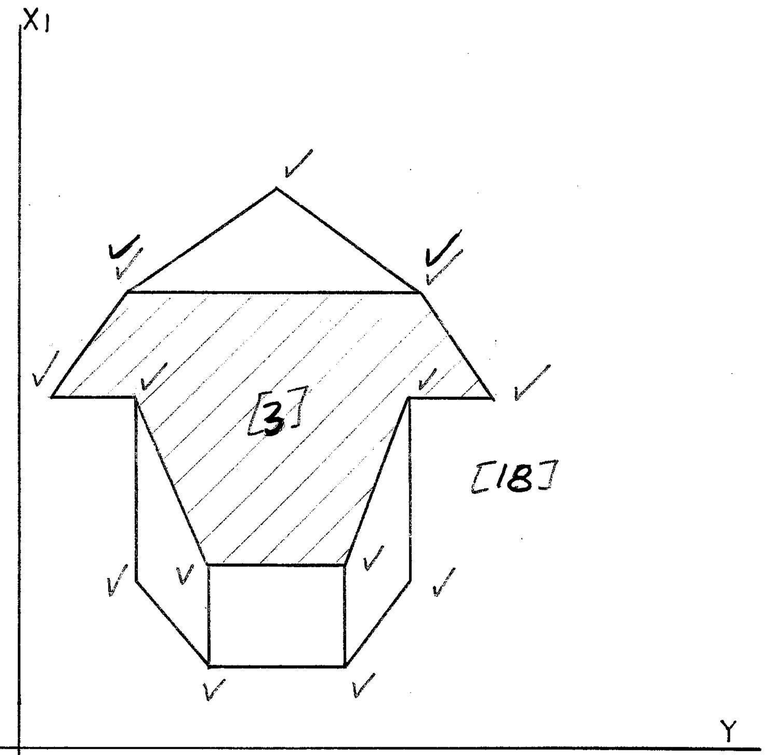

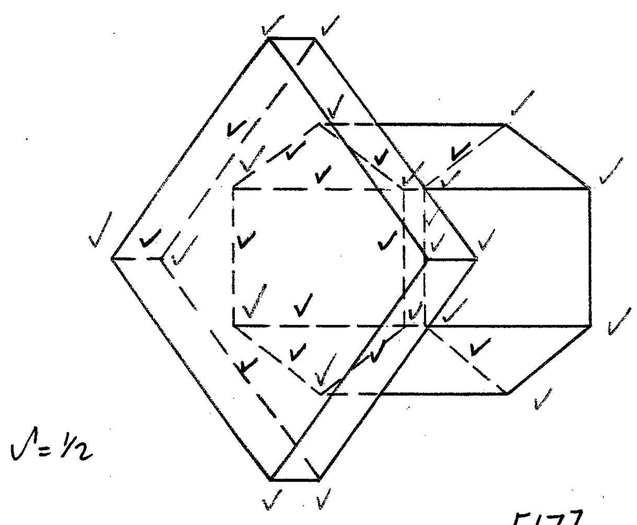

LEFT VIEW = 18

TOP VIEW
HEXAGON = 12
HID. DET. = 11
SQ = 8
HID. DET. = 3
34 ÷ 2
= 17

[35]

FIG. 6