GAUTENG DEPARTMENT OF EDUCATION GAUTENGSE DEPARTEMENT VAN ONDERWYS

Possible Answers
Feb / Mar 2006

TECHNICAL DRAWING : HIGHER GRADE

TEGNIESE TEKENE : HOËRGRAAD

SENIOR CERTIFICATE EXAMINATION

SENIORSERTIFIKAAT-EKSAMEN

711 - 1 / 2 L

QUESTION 1.1

CHOOSE THE CORRECT SECTIONAL VIEW FROM THE GIVEN ALTERNATIVES IN QUESTIONS 1.1.1 TO 1.1.4 AND MARK THE CORRECT ANSWER WITH AN (X) IN THE GIVEN TABLE. (8)

VRAAG 1.1

KIES DIE KORREKTE DEURSNEE-AANSIG VANUIT DIE GEGEWE ALTERNATIEWE IN VRAE 1.1.1 TOT 1.1.4 EN MERK DIE KORREKTE ANTWOORD MET 'N KRUISIE (X) IN DIE GEGEWE TABEL. (8)

1.1.1

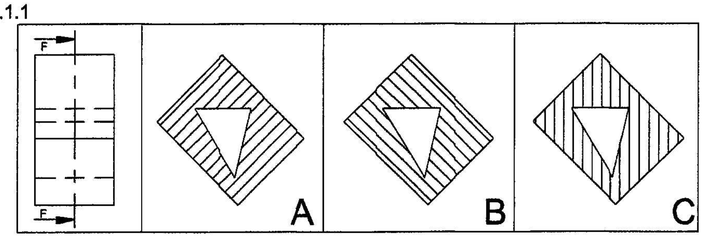

1.1.2

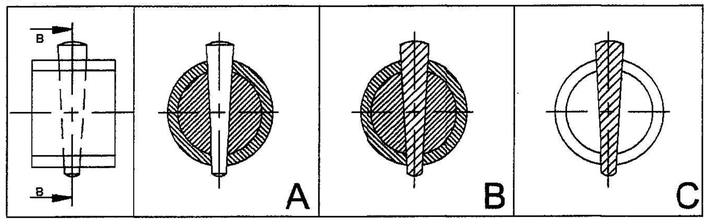

1.1.3

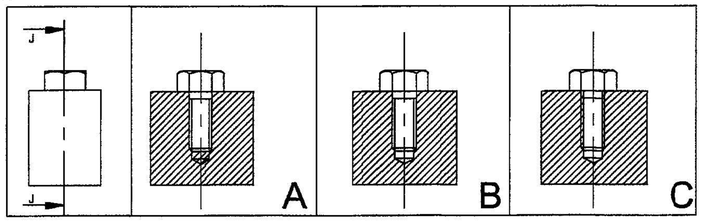

1.1.4

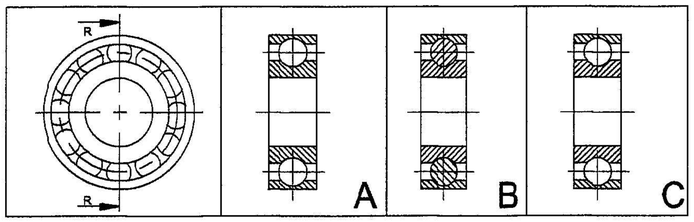

1.1	A	B	~~C~~	2			
1.2	~~A~~	B	C	2			
1.3	A	~~B~~	C	2			
1.4	A	B	~~C~~	2			
TOTAL / TOTAAL				8			

QUESTION 1.2

FIGURE 1.2 ON ANSWER SHEET 1 SHOWS AN INCOMPLETE DRAWING OF AN ASSEMBLY FROM THE INDUSTRY.

STUDY THE DRAWING AND ANSWER THE QUESTIONS THAT FOLLOW. (17)

VRAAG 1.2

FIGUUR 1.2 OP ANTWOORDVEL 1 TOON 'N ONVOLTOOIDE TEKENING VAN 'N SAMESTELLING UIT DIE INDUSTRIE.

BESTUDEER DIE TEKENING EN BEANTWOORD DIE VRAE WAT VOLG. (17)

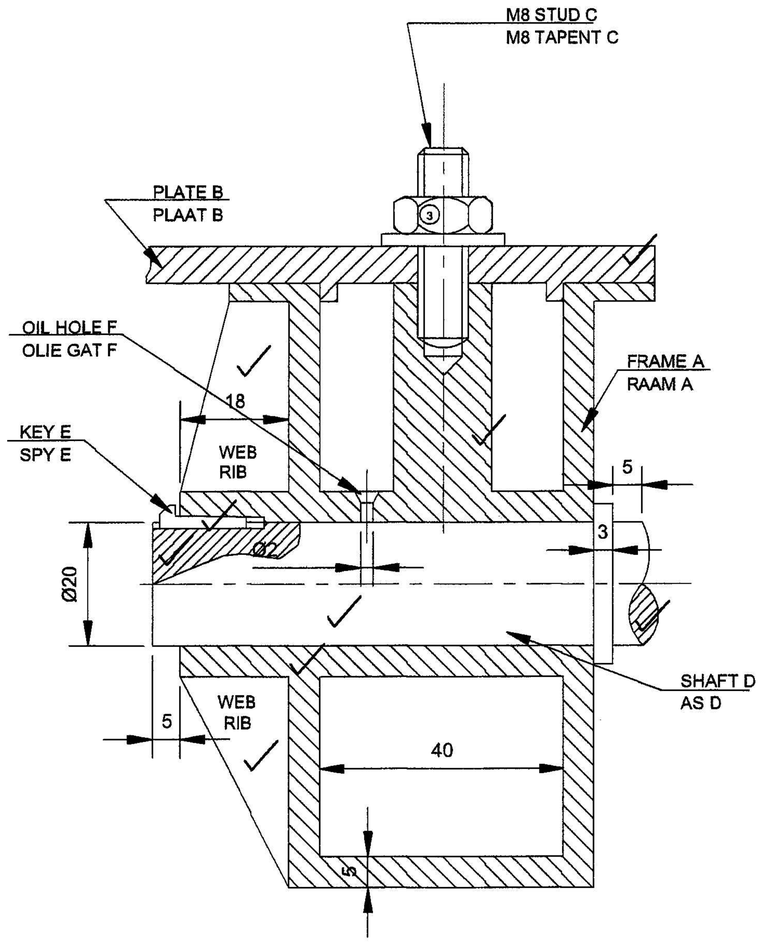

FIGURE 1.2 / FIGUUR 1.2

TECHNICAL DRAWING HG
TEGNIESE TEKENE HG

(Second Paper) 711-1/2 L

(Tweede Vraestel)

QUESTION	ANSWER	MARKS		
1.2.1 WHAT IS THE DIAMETER OF THE OIL HOLE F ?	Ø 2	1		
1.2.2 NAME THE KEY E.	GIBHEAD KEY	2		
1.2.3 CALCULATE THE SHAFT LENGTH.	81 mm	2		
1.2.4 COMPLETE THE DRAWING BY DRAWING IN ALL SECTION LINES.		9		
1.2.5 CONSTRUCT A NUT ON THE STUD C.		3		
TOTAL		17		

VRAE	ANTWOORDE	PUNTE		
1.2.1 WAT IS DIE DIAMETER VAN DIE OLIE GAT F ?	Ø 2	1		
1.2.2 BENOEM DIE SPY E.	NEUSSPY	2		
1.2.3 BEREKEN DIE LENGTE VAN DIE AS.	81 mm	2		
1.2.4 VOLTOOI DIE TEKENING DEUR ALLE ARSEERLYNE IN TE TEKEN.		9		
1.2.5 KONSTRUEER ' N MOER OP TAPENT C.		3		
TOTAL		17		

SUMMARY / OPSOMMING				
1.1	8			
1.2	17			
TOTAL / TOTAAL	25			

EXAMINATION NUMBER / EKSAMENNOMMER

QUESTION / VRAAG 1

ANSWER SHEET 1

ANTWOORDVEL 1

TECHNICAL DRAWING HG

TEGNIESE TEKENE HG

(Second paper) 711-1/2 L

(Tweede Vraestel)

MARK ALLOCATION / PUNTETOEKENNING			
VP	2		
PERSPECTIVE/PERSPEKTIEF	36		
PRESENTATION/AANBIEDING	2		
TOTAL/TOTAAL	40		

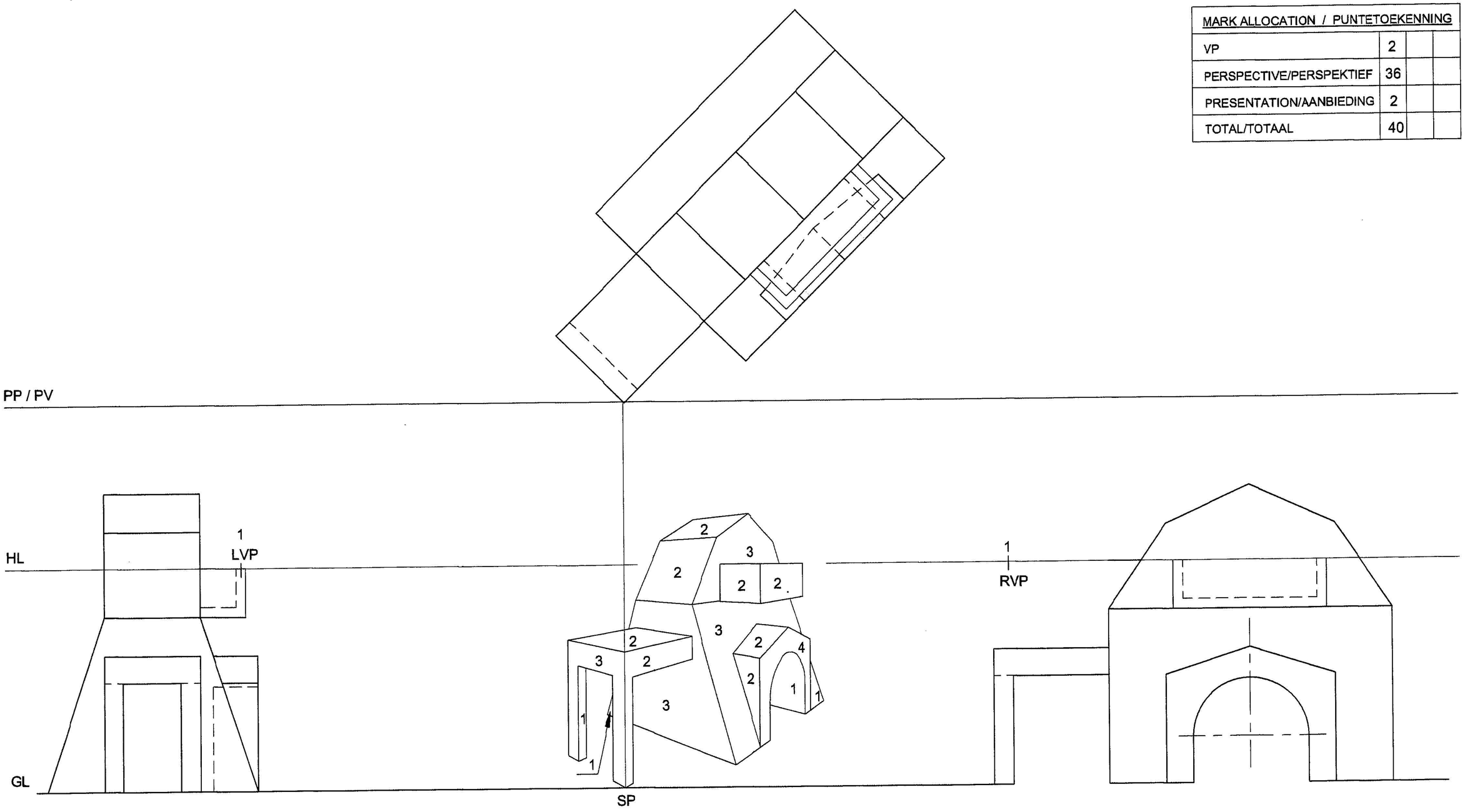

EXAMINATION NUMBER / EKSAMENNOMMER

A/B

QUESTION 2 / VRAAG 2

ANSWER SHEET 2

ANTWOORDVEL 2

TECHNICAL DRAWING HG
TEGNIESE TEKENE HG

(Second Paper)
(Tweede Vraestel) 711-1/2 K

QUESTION 3

FIGURE 3 SHOWS THREE VIEWS OF A SLIDE.

DRAW TO SCALE 1:1 A SECTIONED ISOMETRIC VIEW OF THE SLIDE ON CUTTING PLANE F-F.

USE POINT Q AS THE STARTING POINT.

DO NOT SHOW HIDDEN DETIAL. (40)

VRAAG 3

FIGUUR 3 TOON DRIE AANSIGTE VAN 'N GLYSTUK.

TEKEN VOLGENS SKAAL VAN 1:1 'N DEURSNEE ISOMETRIESE AANSIG VAN DIE GLYSTUK OP SNYVLAK F-F.

GEBRUIK PUNT Q AS DIE BEGINPUNT.

MOENIE VERBORGE DETAIL TOON NIE. (40)

MARK ALLOCATION / PUNTETOEKENNING				
ISOMETRIC / ISOMETRIES	36			
SECTIONING / ARSERING	2			
PRESENTATION / AANBIEDING	2			
TOTAL / TOTAAL	40			

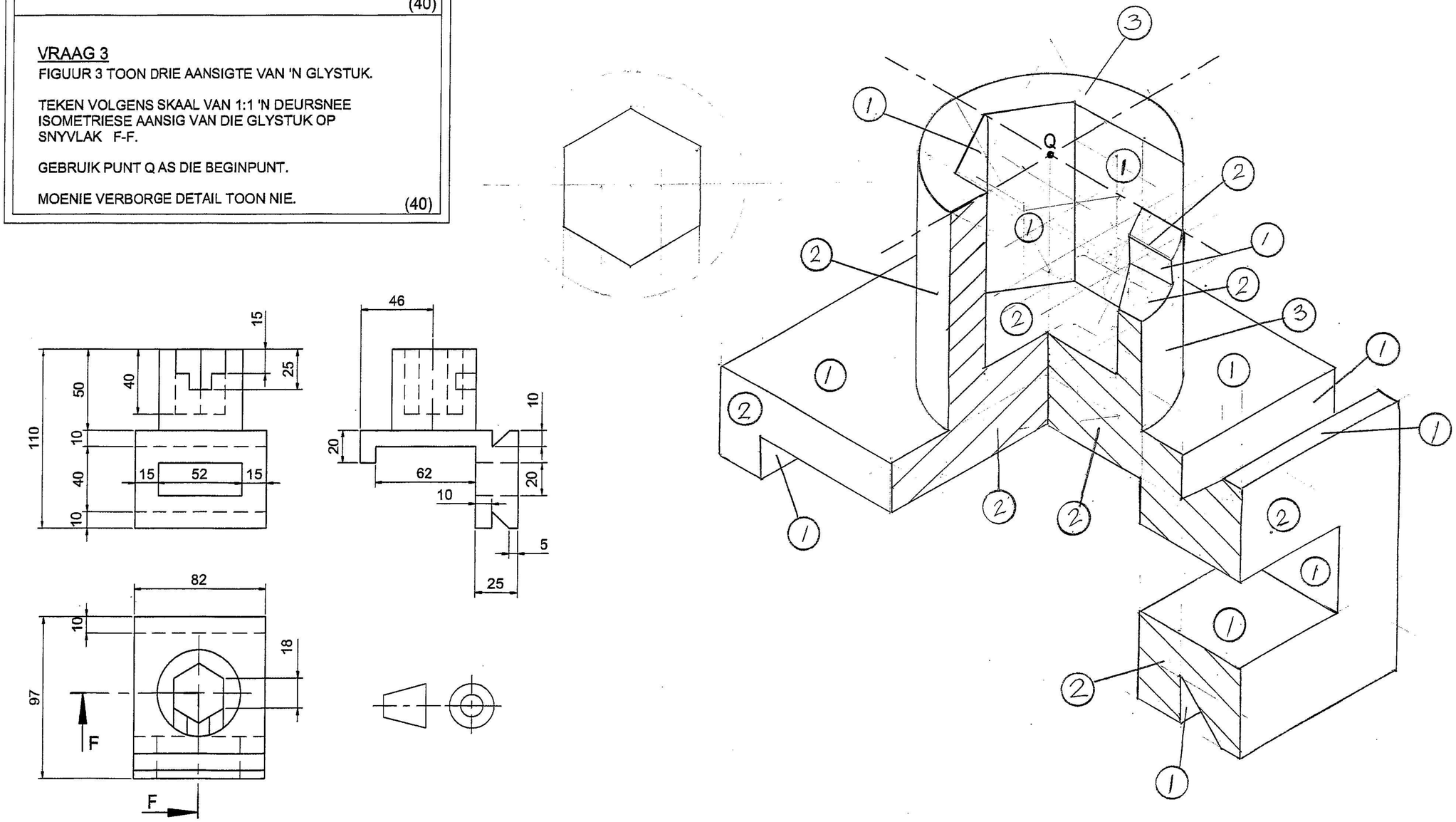

FIGURE 3 / FIGUUR 3

EXAMINATION NUMBER / EKSAMENNOMMER

A/B

QUESTION 3 / VRAAG 3

ANSWER SHEET 3
ANTWOORDVEL 3

TECHNICAL DRAWING HG
TEGNIESE TEKENE HG

(Second Paper) 711-1/2 L
(Tweede Vraestel)

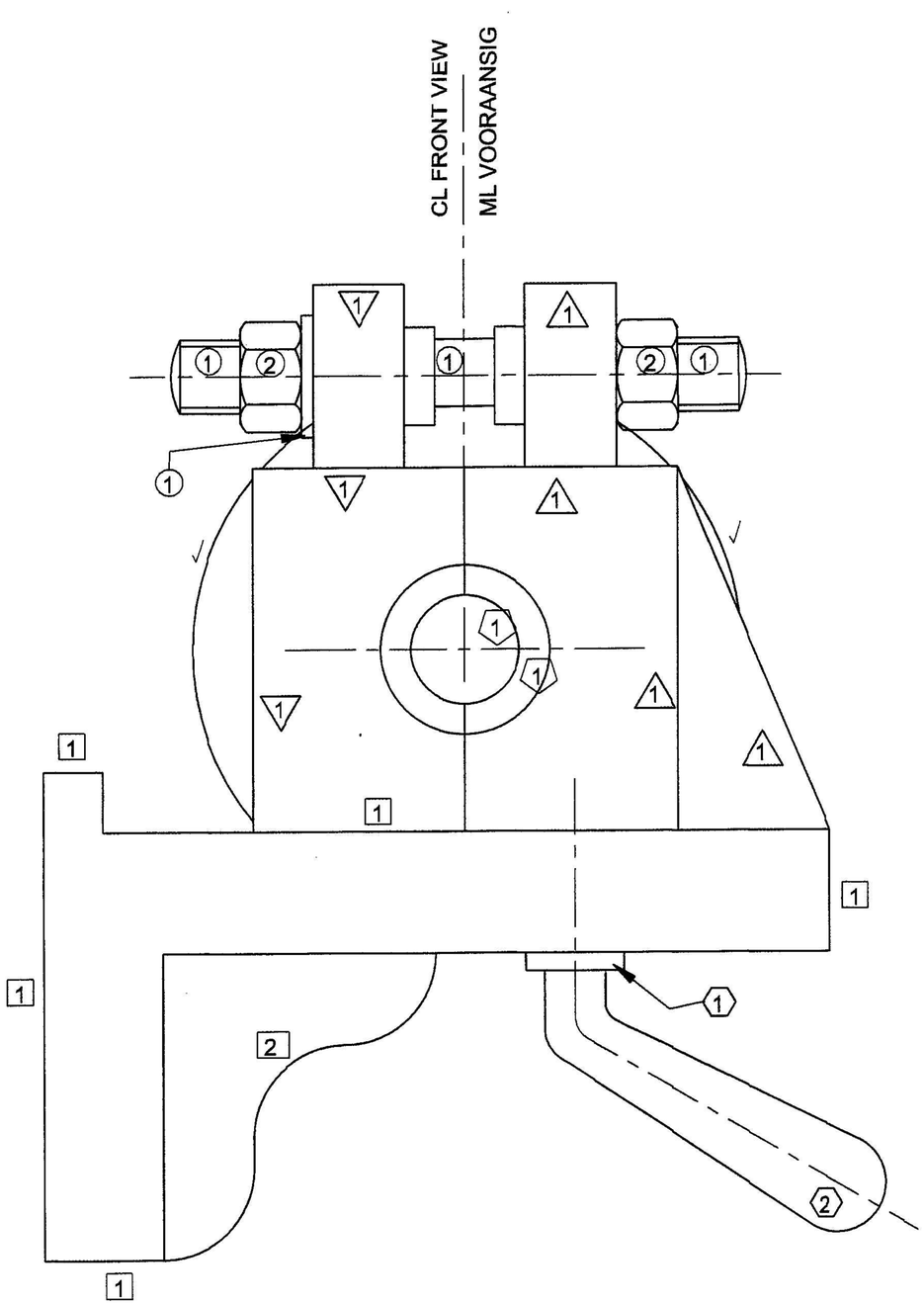

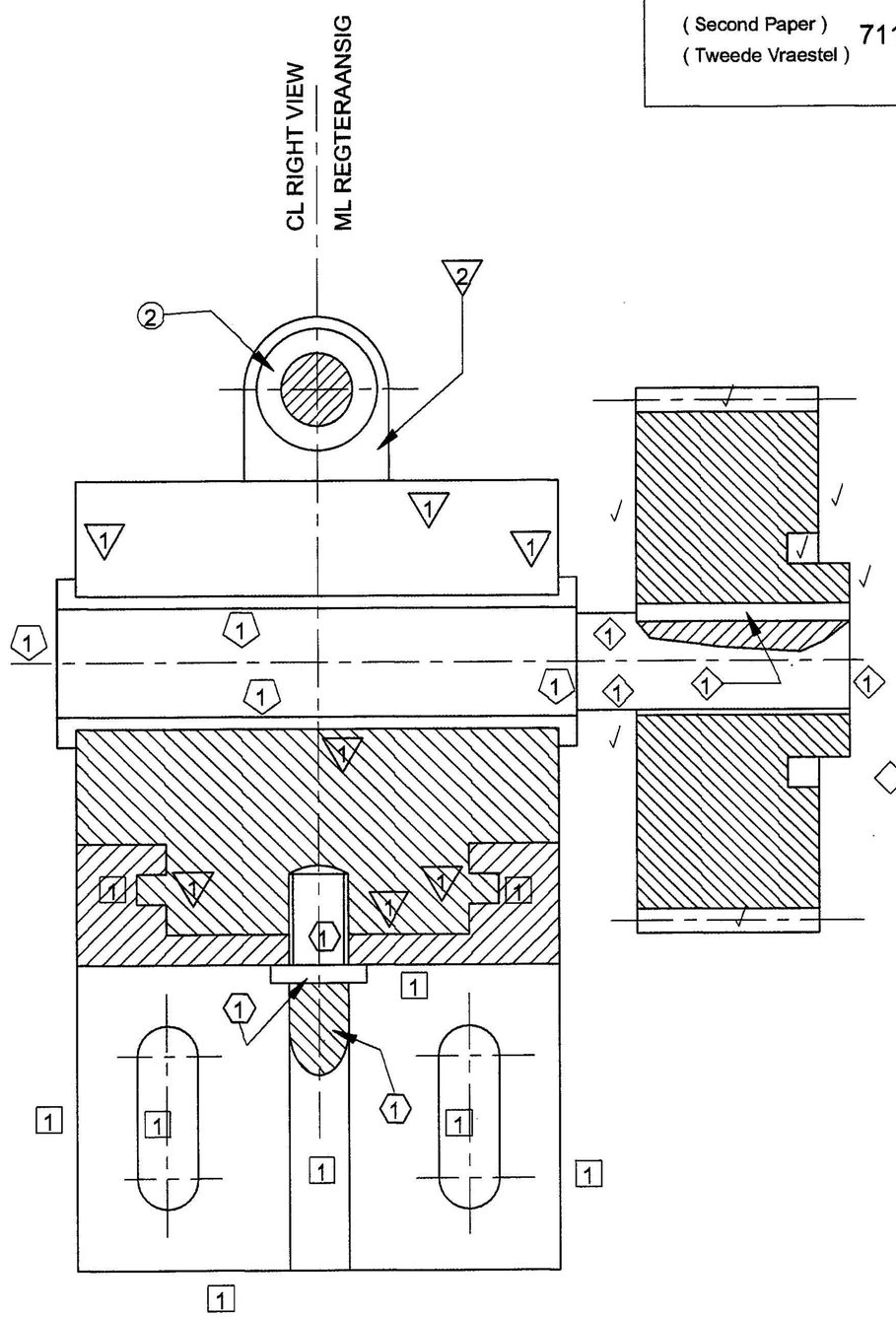

MARK ALLOCATION / PUNTETOEKENNING			
FRONT VIEW / VOORAANSIG			
FRAME / RAAM	7		
SLIDE B / GLYSTUK B	4		
SLIDE C / GLYSTUK C	4		
BUSHES / BUSSE	2		
L-LEVER / S-HEFBOOM	3		
GEAR / RAT	2		
BOLT / BOUT	7		
SUBTOTAL / SUBTOTAAL	29		
RIGHT VIEW / REGTERAANSIG			
FRAME / RAAM	9		
SECTIONING/ARSERING	2		
SLIDE / GLYSTUK	9		
SECTIONING/ARSERING	2		
BUSH / BUS - SHAFT / AS	8		
SECTIONING/ARSERING	2		
L-LEVER / S-HEFBOOM	3		
SECTIONING/ARSERING	2		
GEAR / RAT	7		
SECTIONING/ARSERING	3		
BOLT / BOUT	2		
SECTIONING/ARSERING	1		
SUBTOTAL / SUBTOTAAL	50		
GENERAL/ALGEMEEN			
DIMENSIONS/AFMETINGS	5		
PRESENTATION/AANBIEDING	5		
ASSEMBLY/SAMESTELLING	6		
SUBTOTAL / SUBTOTAAL	16		
TOTAL / TOTAAL	95		

EXAMINATION NUMBER / EKSAMENNOMMER

A/B

QUESTION 4 / VRAAG 4

ANSWER SHEET 4
ANTWOORDVEL 4