GAUTENG
DEPARTMENT OF EDUCATION

GAUTENGSE
DEPARTEMENT VAN ONDERWYS

SENIOR CERTIFICATE EXAMINATION

SENIORSERTIFIKAAT - EKSAMEN

TECHNICAL DRAWING HG 711-1/1 L

TEGNIESE TEKENE HG 711-1/1 L

(First Paper : Descriptive Geometry and Locus)

(Eerste Vraestel : Beskrywende Meetkunde

TIME : 3 hours

MARKS : 200

INSTRUCTIONS :

1. Answer all questions on the answer sheets provided.
2. Any dimensions or details not given may be a
3. Hand in all your answer sheets (
   or not) in correct **numeric**
4. Write your
5. If not otherw
6. NOTE :
7. Align the answer
8. **All** questions are co
9. The use of coloured le

Possible Answers
Feb / Mar 2006

onste

dblaaie.

n skaal van 1:1 vir alle antwoorde.

= Horisontale Vlak
VV = Vertikale Vlak

Rig die antwoordblaaie op senterlyne/grondlyne en nie die raam nie.

8. **Alle** vrae is verpligtend.
9. Die gebruik van gekleurde lood sal gepenaliseer word.

R OFFICIAL USE ONLY
S VIR AMPTELIKE GEBRUIK

	MARKS PUNTE	MODERATED MODERATOR	MAXIMUM MAKSIMUM
			25
			10
			10
3			30
4			35
5			30
6			30
7			30
PRESEN-TATION AANBIE-DING			10
TOTAL TOTAAL			**200**
CHECKED BY GEKONTRO-LEER DEUR			%

EXAMINATION NUMBER
EKSAMENNOMMER 8 0 5

Possible Answers
Feb / Mar 2006

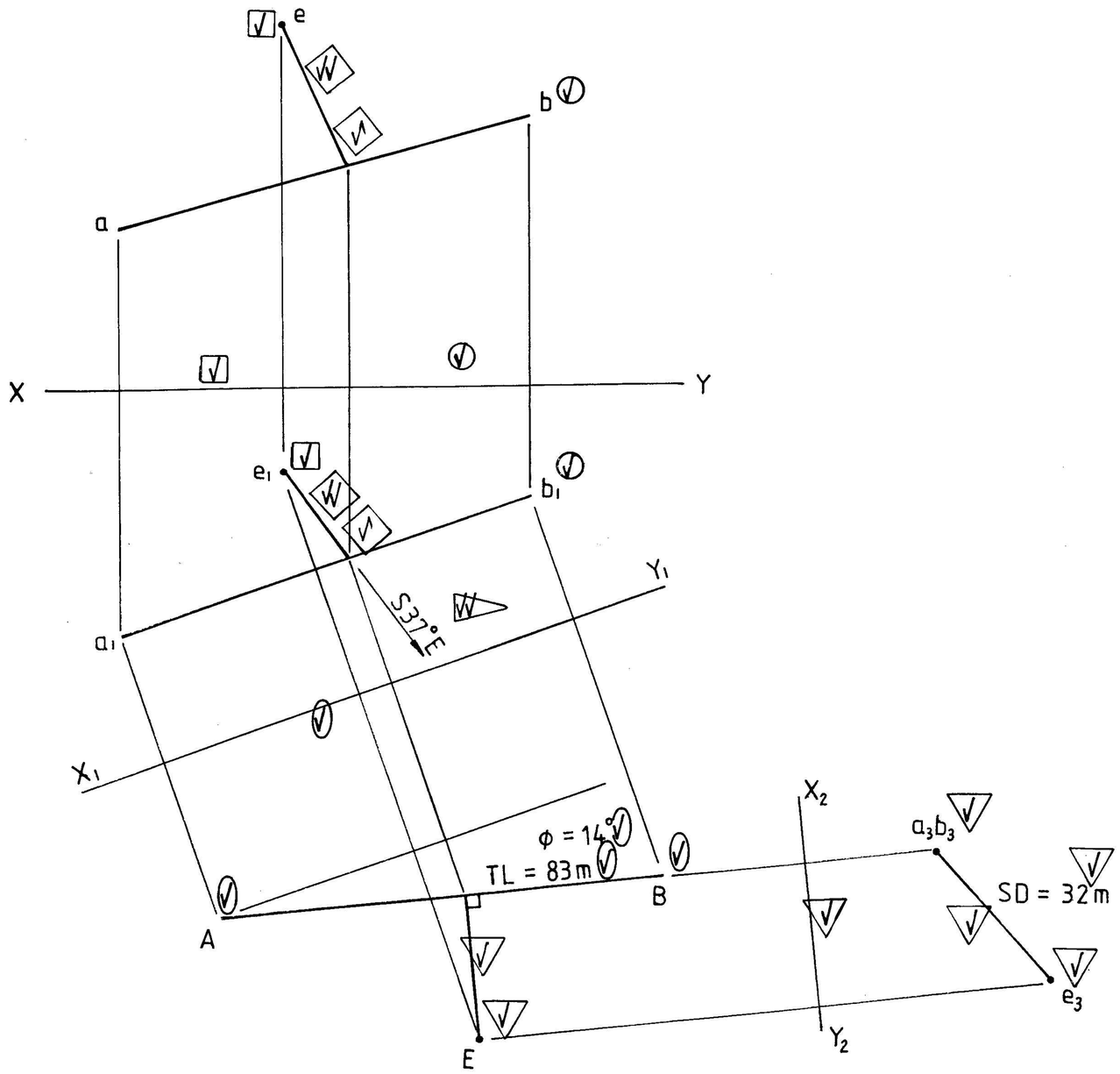

QUESTION 1	MARKS PUNTE
Point A represents one point of a coal mining tunnel AB. Point B is located 20 metres above point A and 20 metres in front of the VP. The horizontal distance between points A and B is 76 metres.	
Determine : 1.1 The front view and top view of tunnel AB. (Use a scale 1:1000.) 1.2 The true length and true angle of inclination between tunnel AB and the HP. An explosion has sealed off the tunnel at the main access shaft. In order to reach the trapped miners it is decided to start an emergency shaft from point E. Point E lies 30 metres to the right of point A, 67 metres above the HP and 15 metres in front of the VP. 1.3 The front view and top view of point E. 1.4 The true length of the emergency shaft. 1.5 Indicate the emergency shaft as a line segment in all the views. 1.6 The geographical bearing of the emergency shaft.	3 5 3 7 5 2
	25

VRAAG 1	
Punt A stel een punt van 'n steenkool myntonnel AB voor. Punt B lê 20 meter bokant punt A en 20 meter voor die VV. Die horisontale afstand tussen pute A en B is 76 meter.	
Bepaal : 1.1 Die vooraansig en boaansig van tonnel AB. (Gebruik 'n skaal van 1:1000) 1.2 Die ware lengte en ware helling tussen tonnel AB en die HV 'n Ondergrondse ontploffing sny die tonnel af van die hoof toegangskag. Om die vasgekeerde myners te bereik, word besluit om 'n noodskag vanaf punt E te begin. Punt E lê 30 meter regs van punt A, 67 meter bo die HV en 15 meter voor die VV. 1.3 Die vooraansig en boaansig van punt E. 1.4 Die ware lengte van die noodskag. 1.5 Toon die noodskag as 'n lynstuk in al die aansigte 1.6 Die geografiese ligging van die noodskag	3 5 3 7 5 2
	25

Possible Answers
Feb / Mar 2006

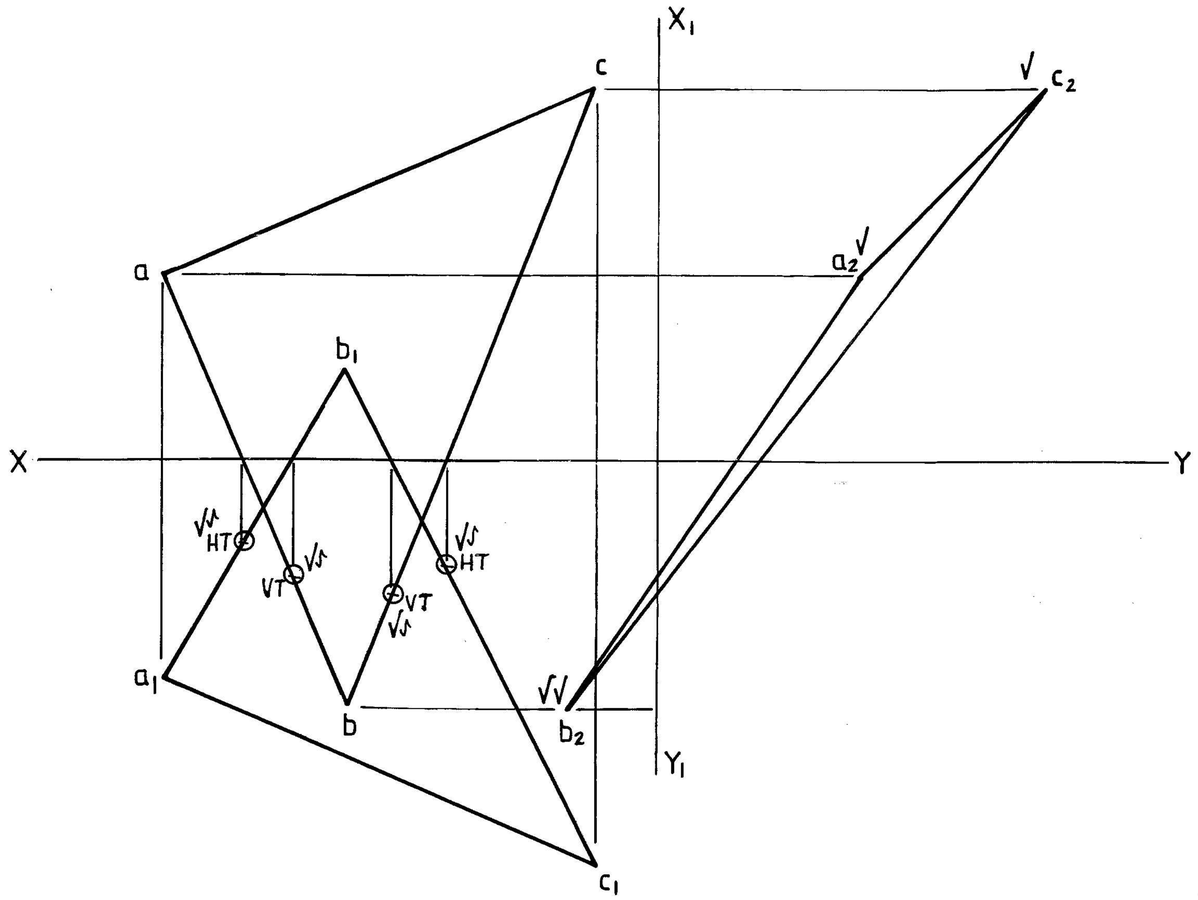

QUESTION 2		
The front view and top view of a plane figure ABC is given.		
Determine : 2.1 The left view of plane figure ABC. 2.2 Indicate and label clearly the horizontal and vertical traces of line segments AB and CB.	4 6	
	10	

VRAAG 2		
Die vooraansig en boaansig van vlakfiguur ABC word getoon.		
Bepaal : 2.1 Die linkeraansig van die vlakfiguur ABC. 2.2 Benoem en toon die vertikale en horisontale snyspore van lynstukke AB en CB duidelik aan.	4 6	
	10	

Possible Answers
Feb / Mar 2006

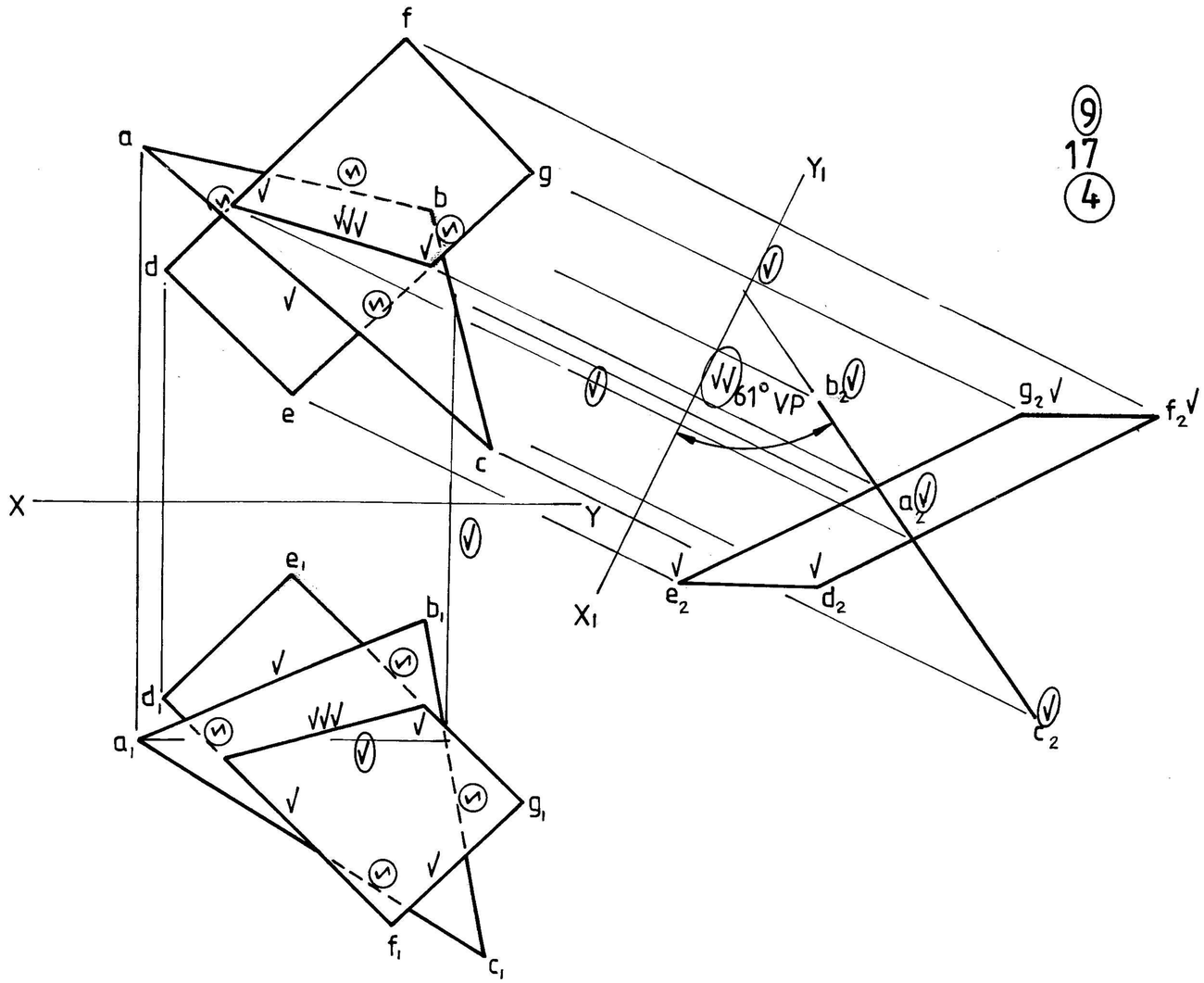

9
17
4

QUESTION 3

The front view and top view of two plane figures ABC and DEFG which penetrate each other is shown.

Determine :

3.1 The true angle of inclination between plane figure ABC and the VP	9
3.2 The line of penetration (trace) between the two plane figures in all the views	17
3.3 Show all hidden detail.	4
	30

VRAAG 3

Die vooraansig en boaansig van twee vlakfigure ABC en DEFG wat mekaar deurdring word getoon.

Bepaal :

3.1 Die ware helling tussen vlakfiguur ABC en die VV	9
3.2 Deurdringingslyn (snyspoor) tussen die twee vlakfigure in alle aansigte	17
3.3 Toon alle verborge detail.	4
	30

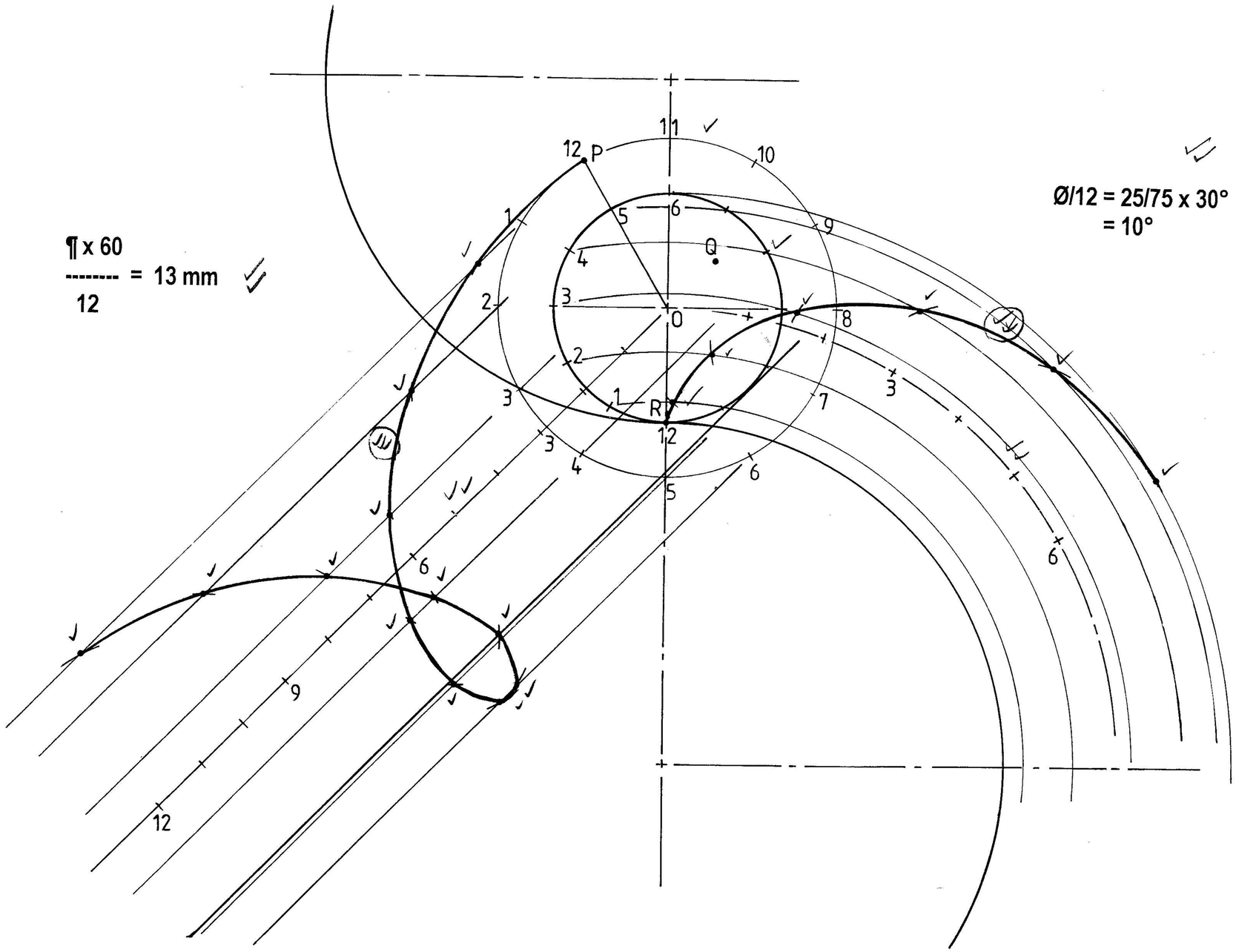

QUESTION 4

A disc O rolls without slipping along the contours shown. The positions of points P, Q and R are also shown. Determine which point and direction must be used to generate the following curves :

4.1 One revolution to form a **SUPERIOR TROCHOID**	15	
4.2 Half of a revolution to form an **EPI-CYCLOID**	10	
4.3 Show all constructions and calculations.	10	
	35	

VRAAG 4

'n Ronde skyf O rol sonder om te gly oor die kontoere getoon. Die posisies van punte P, Q en R word ook getoon. Bepaal watter punt en rigting gebruik moet word om die volgende lokusse te vorm:

4.1 Een omwenteling vir 'n **HOëR TROGOÏDE**	15	
4.2 'n Halwe omwenteling vir 'n **EPI-SIKLOÏDE**	10	
4.3 Toon alle berekeninge en konstruksies.	10	
	35	

Possible Answers
Feb / Mar 2006

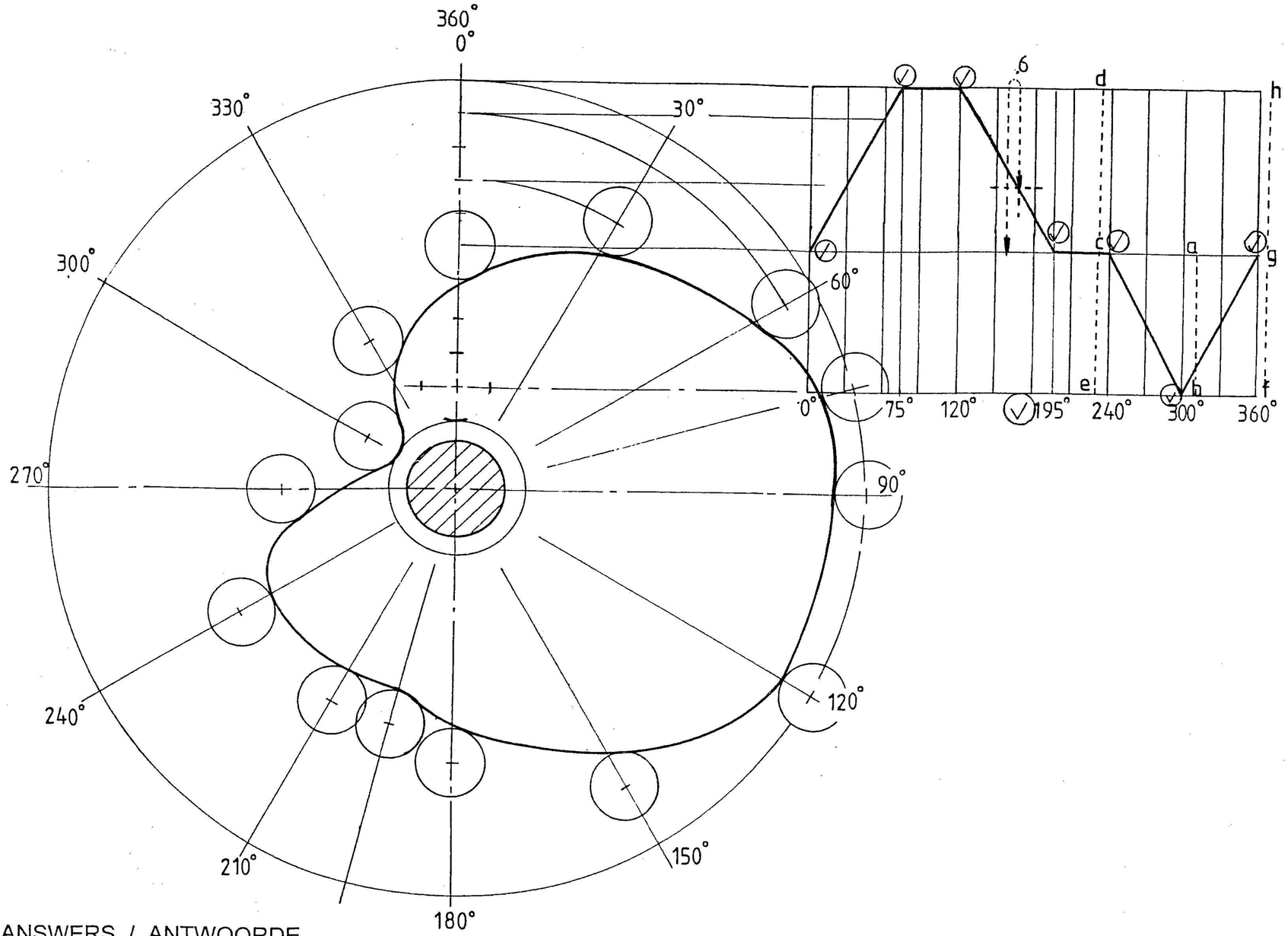

QUESTION 5

A disc cam rotates with uniform velocity and transmits the following uniform motion to a roller-ended follower, reciprocating on the vertical center line of the cam shaft.

- 0° - 75° the follower rises 35 mm
- 75° - 120° a dwell period
- 120° - 195° the follower falls 35 mm
- 195° - 240° a dwell period
- 240° - 300° the follower falls 30 mm
- 300° - 360° the follower returns to its original position

The **minimum** distance from the bottom of the roller follower to the cam shaft centre is 14 mm. The diameter of the cam shaft is 20 mm. The diameter of the roller is 14 mm. Rotation of the cam is anti-clockwise.

From the given information draw :		
5.1 The displacement graph with a horizontal scale of 8 mm = 30°	8	
5.2 The cam profile	17	
From the drawing determine :		
5.3 The displacement of the follower at 300°	1	
5.4 The travel of the follower after 240° rotation	1	
5.5 The total travel of the cam follower	1	
5.6 The angle of rotation after 56 mm travel	1	
5.7 The number of times the follower is at rest in one revolution.	1	
Add your answers to the given tabulation block.	**30**	

ANSWERS / ANTWOORDE

5.3	DISPLACEMENT OF FOLLOWER AT 300° VERPLASING VAN VOLGER BY 300°	ab = 30	1	
5.4	TRAVEL OF FOLLOWER AT 240° SLAG VAN VOLGER BY 240°	cd+dc=70	1	
5.5	TOTAL TRAVEL OF FOLLOWER TOTALE SLAG VAN VOLGER	2 xde= 130	1	
5.6	ANGLE OF ROTATION AFTER 56mm TRAVEL VERPLASINGSHOEK NA 56mm SLAG	135°	1	
5.7	NUMBER OF REST PERIODS IN ONE REVOLUTION AANTAL RUS PERIODES IN EEN OMWENTELING	2	1	

Possible Answers
Feb / Mar 2006

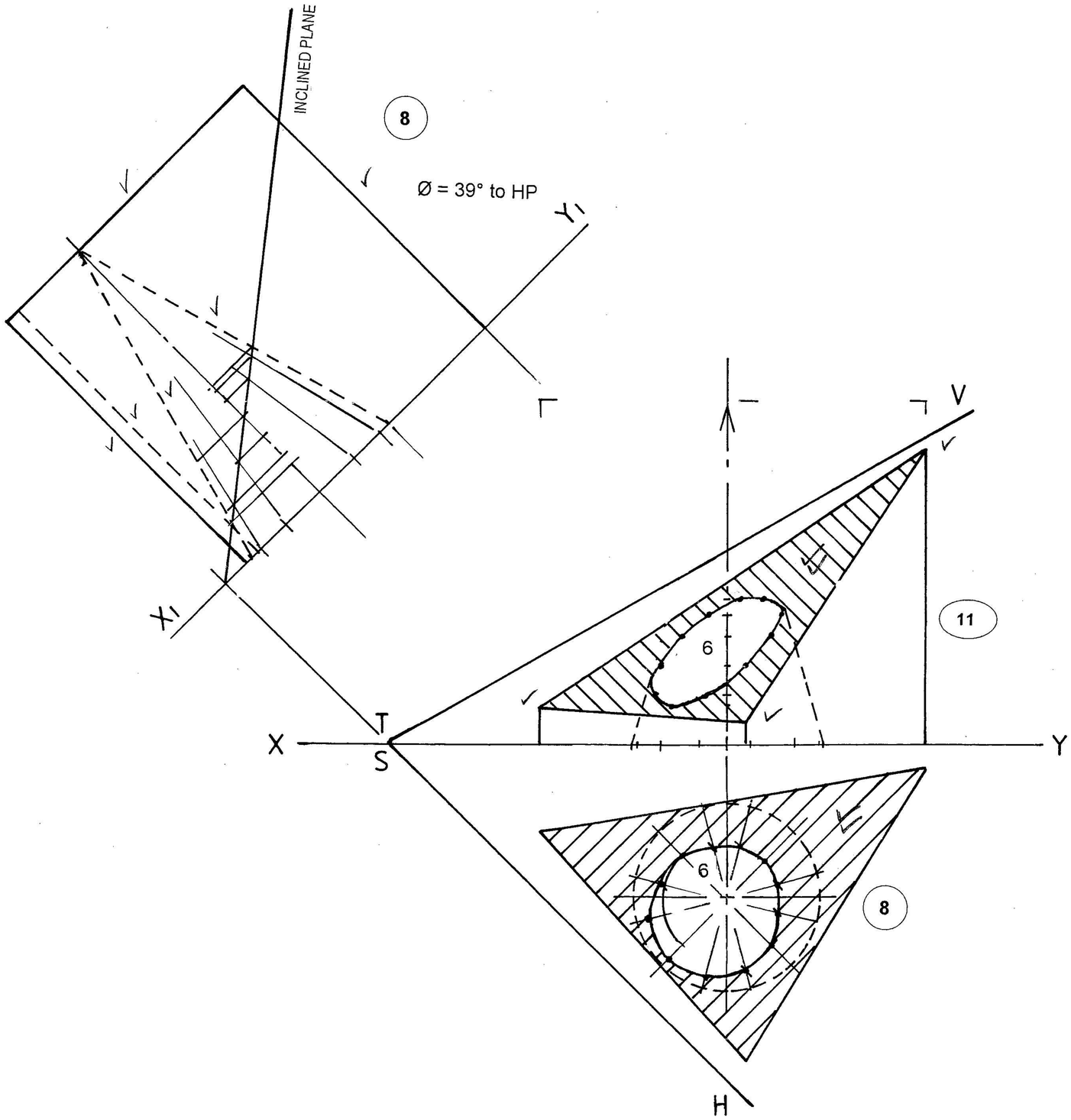

QUESTION 6

The traces VTH of an oblique plane and two incomplete views of a triangular prism with a tapered (conical) hole are shown. The base of the prism rests on the HP.

Draw :

6.1	An auxiliary view of the prism where the oblique plane appears as an inclined plane intersecting the prism.	8
6.2	A sectional top view on cutting plane VTH.	8
6.3	A sectional front view on cutting plane VTH.	11
6.4	Show hidden detail in the auxiliary view.	3
		30

VRAAG 6

Die snyspore VSH van 'n skuinsvlak en twee onvoltooide aansigte van 'n driehoekige prisma met 'n tapse (koniese) gat word getoon. Die basis van die prisma rus op die HV.

Teken :

6.1	'n Hulpaansig van die prisma waar die skuinsvlak as 'n hellende vlak voorkom en die prisma deurdring.	8
6.2	'n Deursnee boaansig op snyvlak VSH.	8
6.3	'n Deursnee vooraansig op snyvlak VSH.	11
6.4	Toon alle verborge detail in die hulpaansig.	3
		30

Possible Answers
Feb / Mar 2006

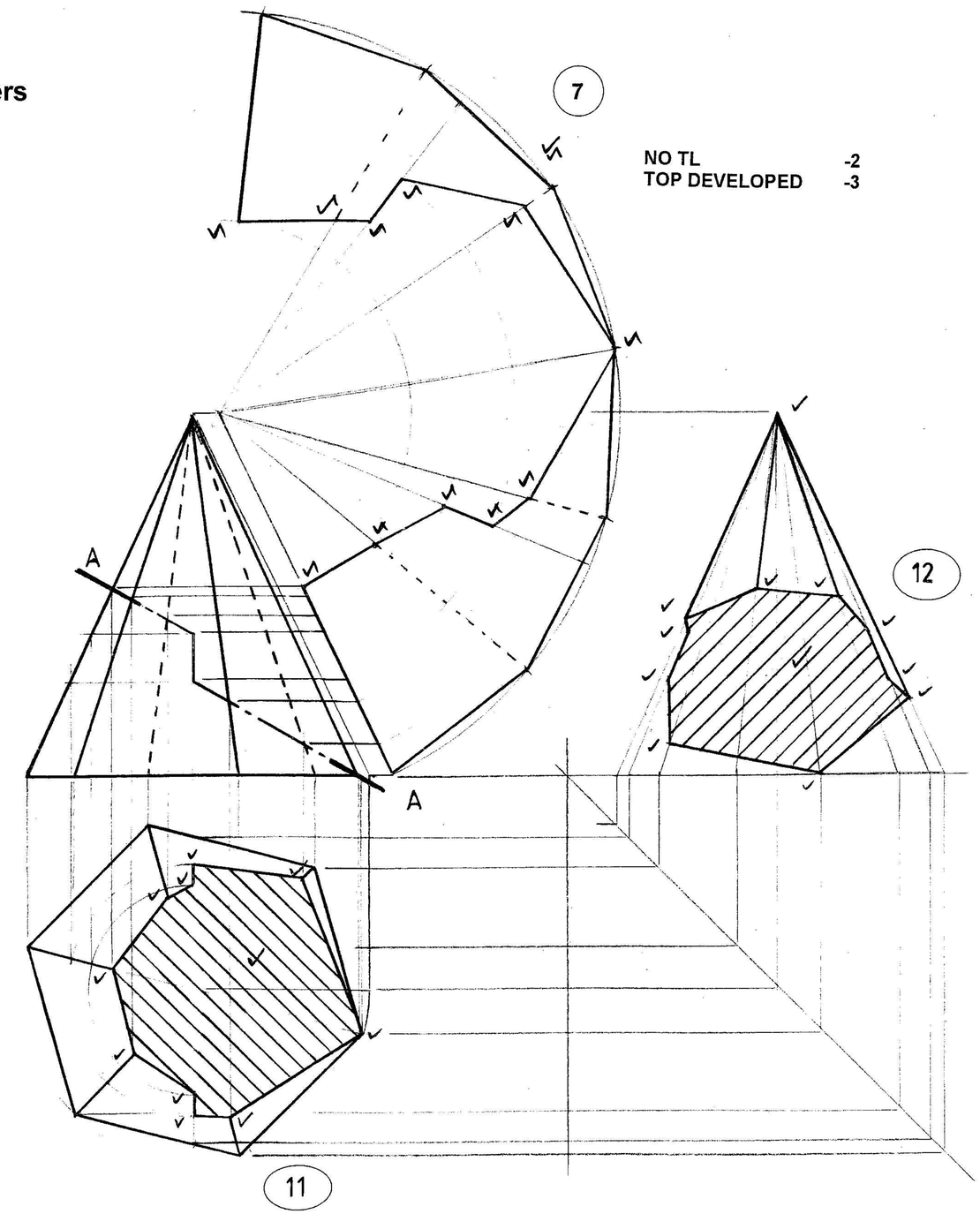

QUESTION 7 The front view and incomplete top view of a regular hexagonal solid pyramid is shown. A cutting plane AA sections the pyramid as shown in the front view.		
Determine : 7.1 The sectional top view of the pyramid. 7.2 The sectional left view of the pyramid. 7.3 The surface development of the section below the cutting plane.	11 12 7	
	30	
VRAAG 7 Die vooraansig en onvoltooide boaansig van 'n reëlmatige soliede seshoekige piramide word getoon. 'n Snyvlak AA sny die piramide soos aangetoon in die vooraansig.		
Bepaal : 7.1 Die deursnee boaansig van die piramide. 7.2 Die deursnee linkeraansig van die piramide. 7.3 Die oppervlakontwikkeling van die gedeelte onder die snyvlak.	11 12 7	
	30	