GAUTENG DEPARTMENT OF EDUCATION

SENIOR CERTIFICATE EXAMINATION

POSSIBLE ANSWERS FOR : MOTOR MECHANICS SG

Note: ***Any other correct answer not mentioned in the memorandum may be accepted as correct.***

SECTION A
QUESTION 1

1.1	B – Excessive negative camber.	(2)
1.2	C – Change alternating current to direct current.	(2)
1.3	A – Volumetric efficiency of the engine	(2)
1.4	D – Power balance	(2)
1.5	A – stator	(2)
1.6	B – 1,3,4,2	(2)
1.7	B – 60°	(2)
1.8	A – the perpendicular line and centre line of the wheel as seen from the front	(2)
1.9	C – The quantity of fuel injected	(2)
1.10	B – an electrical switch.	(2)
1.11	• interrupts base current by means of contact points • interrupts base current by means of reverse current	2x1=(2)
1.12	• weight of piston • spring tension	1x2=(2)
1.13	• safety goggles – grinding • safety goggles – drilling • safety goggles – underneath motor • safety goggles – compressed air • welding goggles – welding	2x1=(2)
1.14	• Keep flammable liquids in containers with screw tops. • No smoking in workshop • Remove fuel tank when welding nearby • Extinguisher available when welding. • Oil soaked cloths must not be left lying all over in workshop	3x1=(3)
1.15	1,2,4,5,3	(2)

1.16
1.16.1

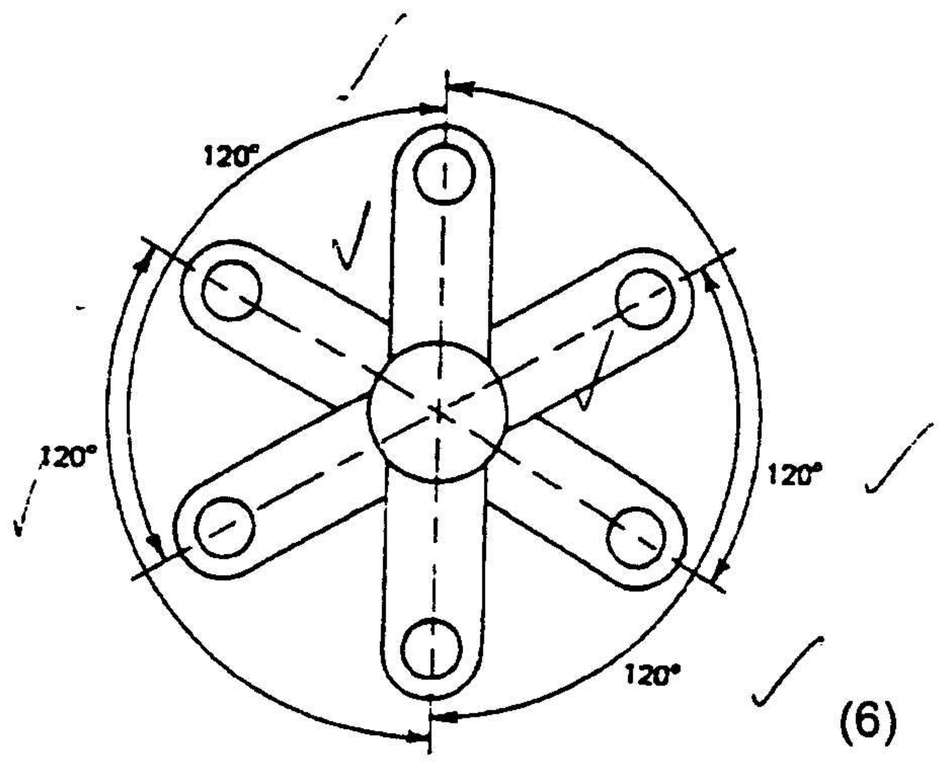

(6)

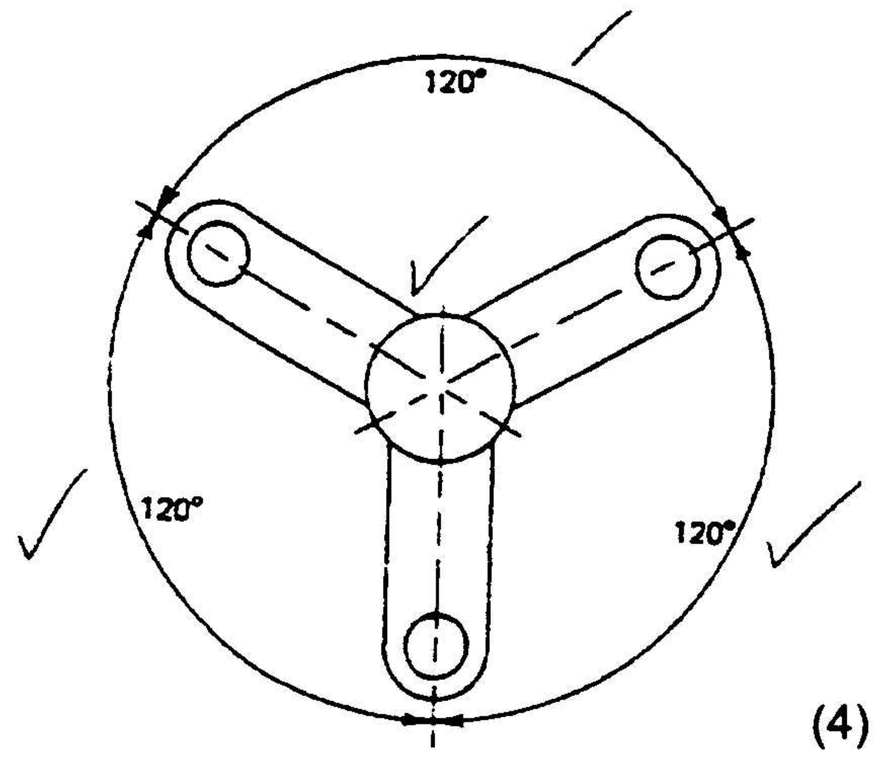

(4)

One tick = 1 mark

1.17 $$ME = \frac{BP \times 100}{IP}$$

$$= \frac{30}{40} \times 100$$

$$= 75\ \%$$

(4)

1.18

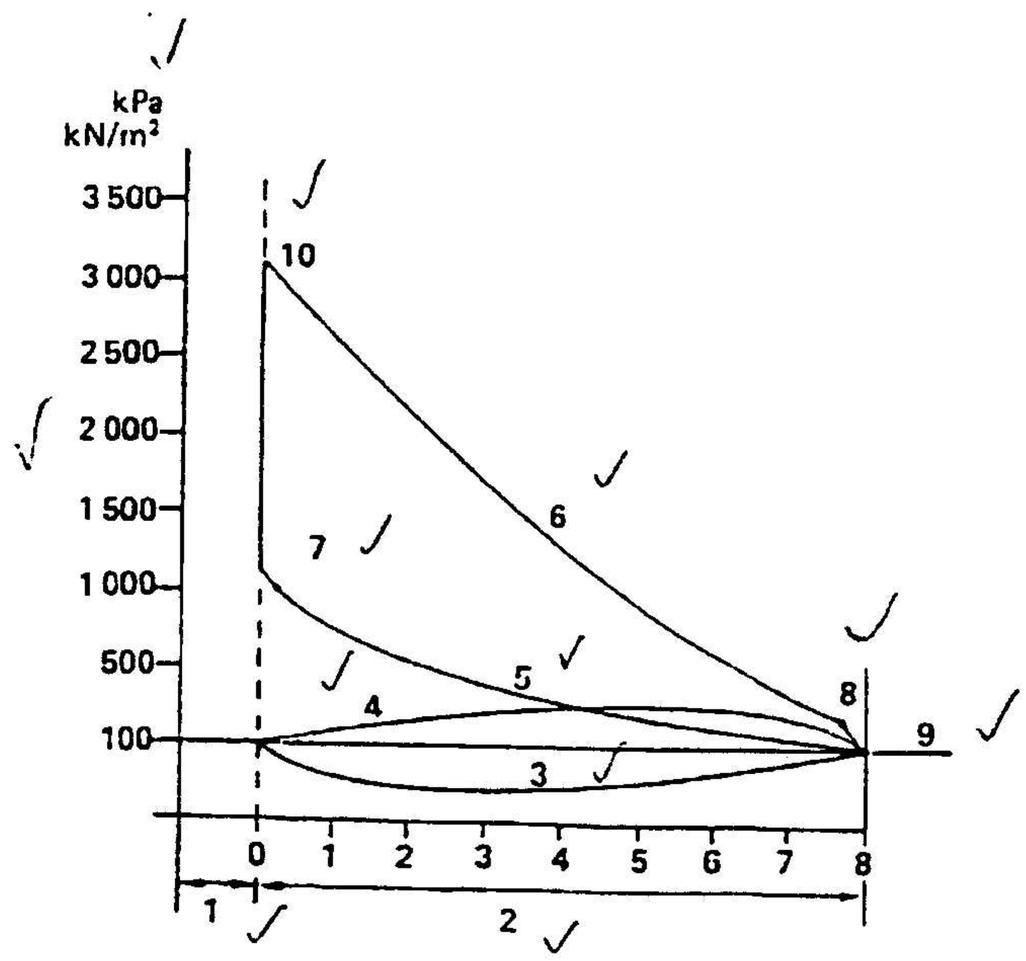

One tick = 1 mark = (12)

1.19 $T = F \times \text{distance}$

$= 150 \times \frac{220}{1000}$

$= 32{,}3 \text{ Nm}$

$F = m \times a$
$= 15 \times 9.8$
$= 147 \text{ N}$ One tick = 1 mark (4)

1.20

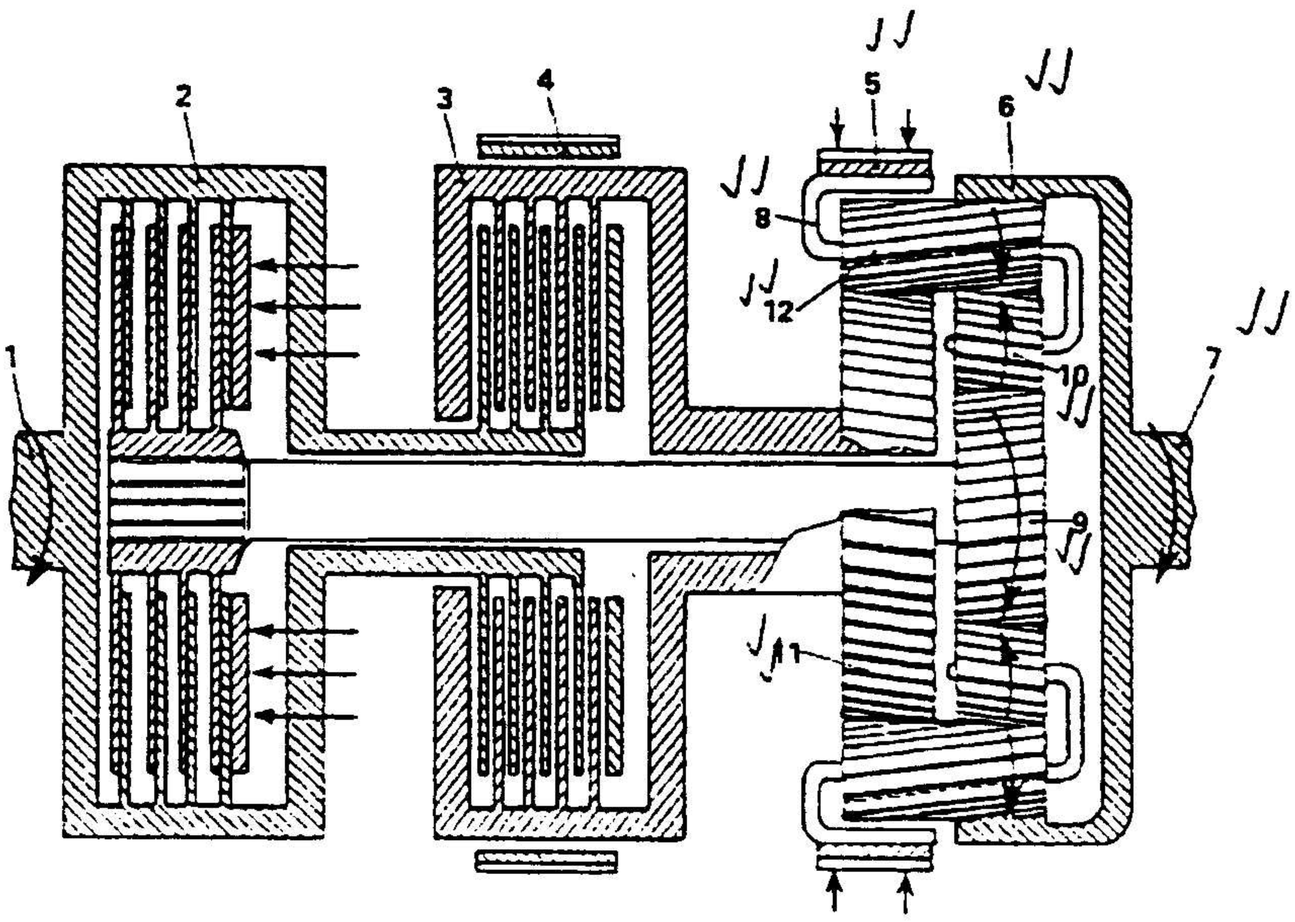

One tick = 1 mark (16)

1.20.1
(A) secondary sun gear. (2)
(B) front clutch (2)

1.20.2
(A) secondary sun gear (2)
(B) planetary carrier (2)

1.21

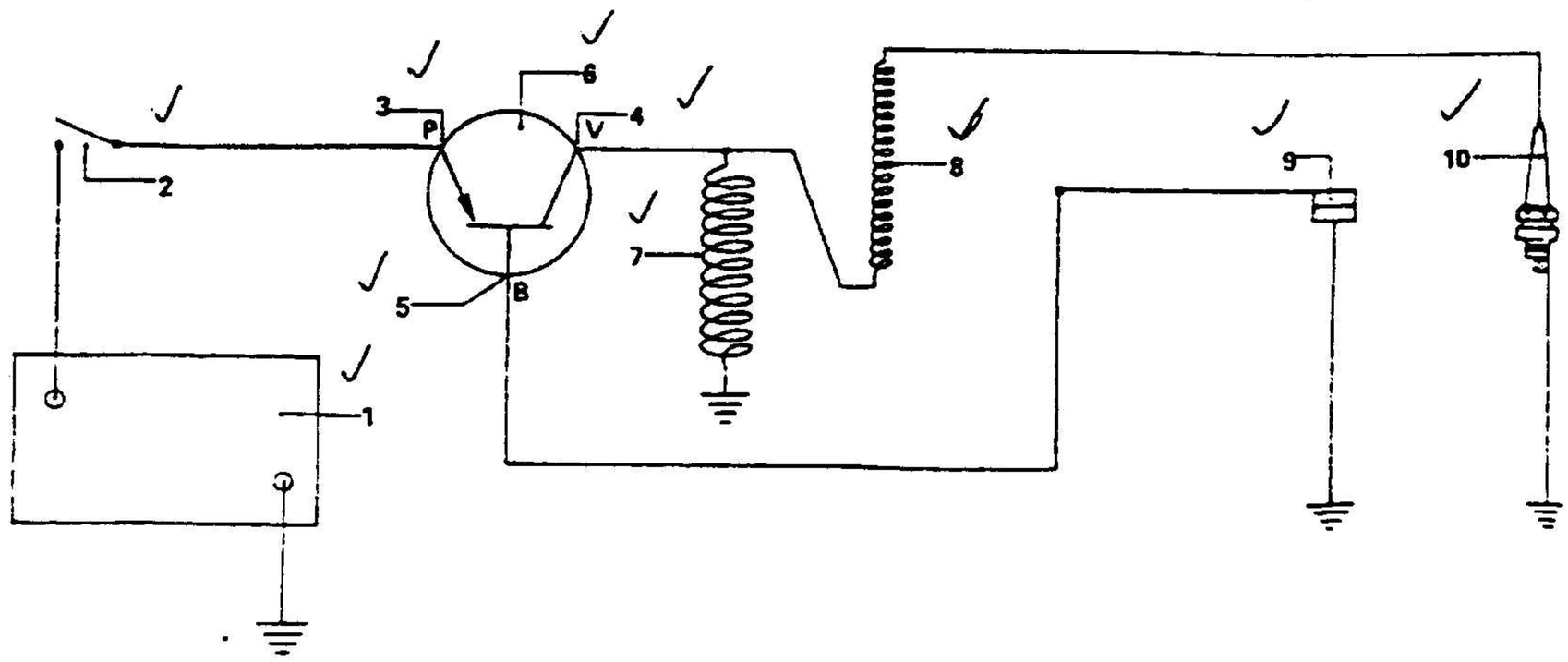

One tick = 1 mark (10)

1.22
- switch
- transistor
- contact points
- primary coil
- battery 3x1=(3)

1.23
- spark plug
- secondary coil
- spark plug wires
- coil
- rotor 2x1=(2)

TOTAL FOR SECTION A: [100]

SECTION B
QUESTION 2

2.1	2.1.1	**1**	–	fuel delivery pump	(1)
		2	–	primer pump	(1)
		3	–	secondary filter	(1)
		4	–	primary filter	(1)
		5	–	leak-off pipe	(1)
	2.1.2	**1**	–	Supply fuel at low pressure to injector pump.	(1)
		2	–	Used to bleed fuel system.	(1)

2.2
- Each cylinder receives a precisely measured amount of fuel.
- Air/fuel ratio remains constant at low and high engine speeds.
- Intake manifold allows the air to flow freely improving the volumetric efficiency
- Air locks are eliminated
- Ice forming in inlet manifold is slight. 3x1=(3)

2.3
- Piston type (1)
- Diaphragm type (1)

2.4
- Simple design, with less moving parts than can wear
- Variable venturi opening provides a constant air velocity and variable pressure difference in the venturi which ensure a correct air/fuel ration.
- Ensuring correct air/fuel ratio at all engine speeds.
- Increase volumetric efficiency.
- A single jet is used.
- No complicated compensating systems are required. 5x1=(5)

2.5

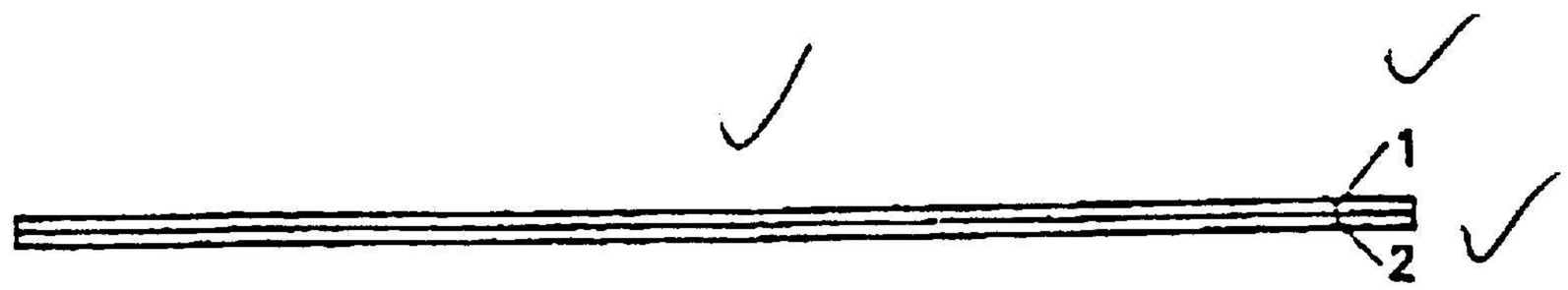

1 – steel (3)
2 – copper **[20]**

QUESTION 3

3.1

3.1.1 Is the equal distribution of all weight around the axis of rotation in the rotation plane. (2)

3.1.2 Is the equal distribution of all weight around the axis of rotation in all rotation planes. (2)

3.2
- Examine the condition of the tyres.
- Tyres should be the same size and display similar wear
- Do not mix cross ply with radial ply tyres.
- Tyre pressure should be the same.
- Make sure all tyres are round.
- Check tyre run-out.
- Check front wheel bearings for wear.
- Check all steering components.
- Check steering box for abnormal play.
- Check springs.
- Check spring shackles.
- Check centre bolts.
- Check U-bolts.
- Check that chassis of vehicle is not bent.
- Check shock absorbers. Any 5 (5)

3.3
- Check steering system for wear.
- Check suspension and shock absorbers.
- Check front wheel bearings.
- Check run-out on wheels.
- Tyres should be on the same size.
- Tyres should be round.
- Tyre pressure should be the same.
- Check tyres for uneven wear.
- Clean wheels properly
- Remove all old balancing weights Any 3 (3)

3.4
- Convert the rotary motion of the steering wheel into a reciprocating motion of the front wheels.
- Provide driver with the necessary leverage.
- Absorb road shocks. 2x1=(2)

3.5

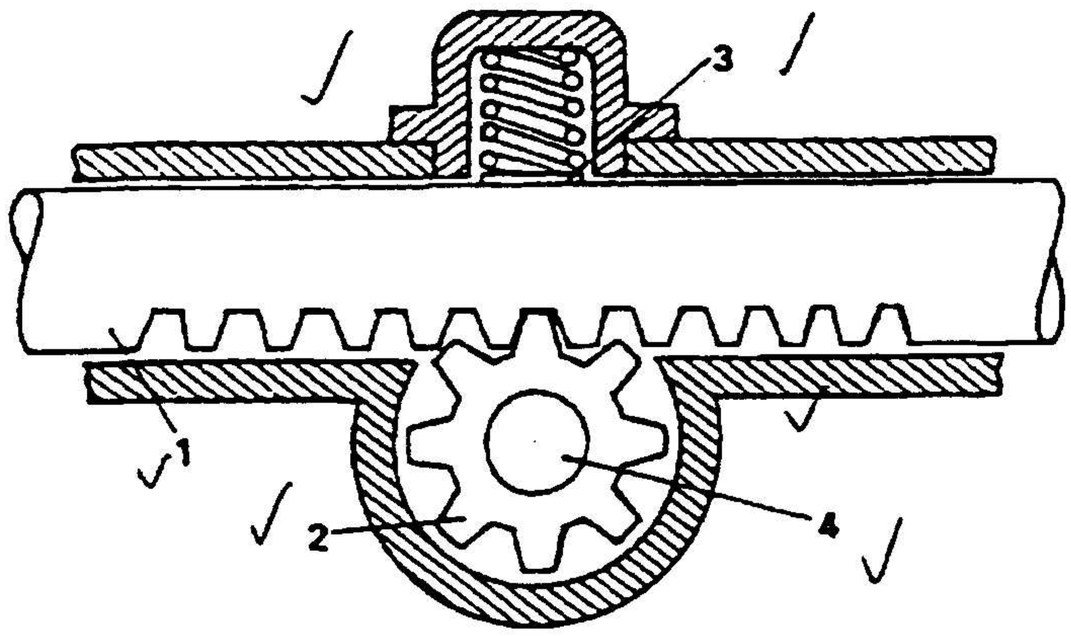

(6)

One tick = 1 mark **[20]**

QUESTION 4

4.1	1	venturi	(1)
	2	idle set screw	(1)
	3	choke	(1)
	4	primary barrel	(1)
	5	secondary barrel	(1)
4.2	Two-phase multi-barrel carburettor		(1)
4.3	•	Carbon	(1)
	•	Hydrogen	(1)
4.4	To refine crude oil into different fractions.		(2)
4.5			
4.5.1	The ease with which a fuel is transformed from a liquid to a vapour.		3x1=(3)
4.5.2	When fuel is ignited by means other than spark from the spark plug.		2x1=(2)

4.6 Hammer action on piston, broken piston rings, worn bearings, oil blown off cylinder walls and carbon deposits in lubricating oil. 5x1=(5)
[20]

QUESTION 5

5.1
1 Pump camshaft
2 Weight carrier frame
3 Bellcrank levers
4 Fly weights
5 Pivots
6 Sleeve
7 Pressure spring
8 Collar (8)

5.2 No. 4 – fly weights (2)

5.3 Control engine speed (2)

5.4
- Cool engine components
- Clean air blown into cylinder forcing exhaust gases out.
- More power is obtained.
- More economical.
- Negligible effect of altitude above sea level. 4x1=(4)

5.5
- Higher thermal efficiency
- Not necessary to advance commencement of injection.
- Shorter warming up period required
- Can use air/fuel ratio of 40:1 without negative effects. 4x1=(4)

[20]

QUESTION 6

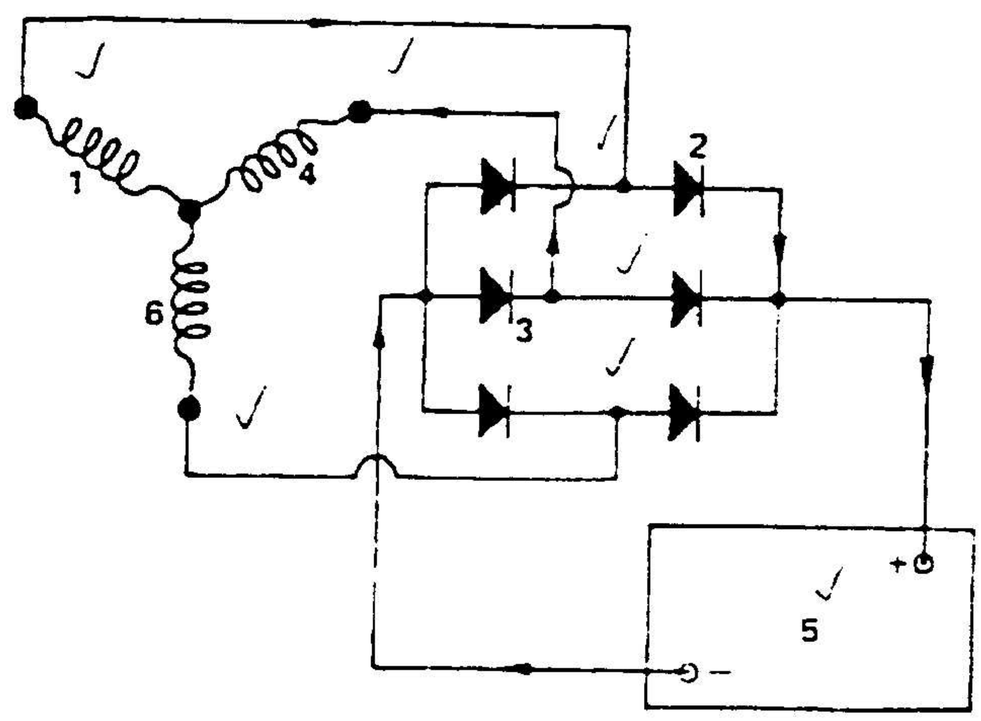

(1) Stator coil
(2) Diode pos
(3) Diode neg
(4) Stator coil
(5) Battery
(6) Stator coil

(8)

6.2

6.2.1 Measuring current flow in amps (2)

6.2.2 ammeter (2)

6.2.3 serie (2)

6.3 parallel motor (2)

6.4

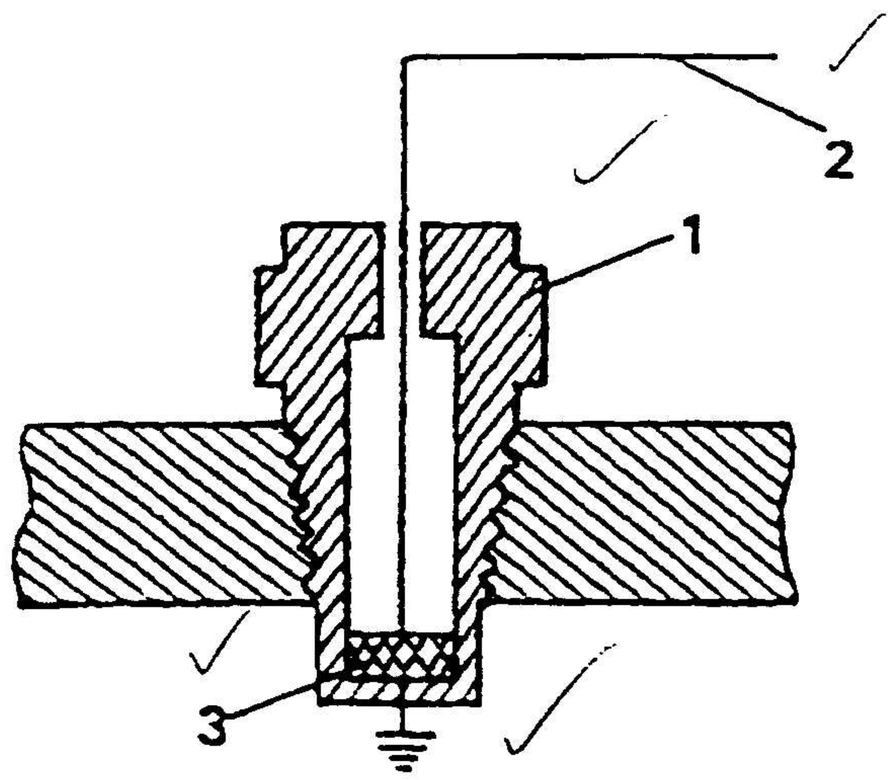

(4)
[20]

QUESTION 7

7.1.1 Area = $\frac{\pi D^2}{4}$

= $\frac{\pi}{4}\frac{100}{1000} \times \frac{100}{1000}$

= 0,008 m^2

IP = $PLAN_n$

= $1\,000 \times \frac{105}{1000} \times \frac{4000}{60x2} \times 6 \times 0{,}008$

= 168 Kw (7)

7.1.2 BP = $2\pi NT\ (2\pi NFR)$

= $2\pi \times 225 \times \frac{1400}{1000} \times \frac{4000}{60}$

= 131947

= 132 kW (5)

7.1.3 ME $= \frac{BP}{IP} \times 100$

$= \frac{132}{168} \times 100$

$= 78{,}6\ \%$ (2)

7.1.4 SV $= \frac{\pi}{4} \times \frac{100}{10} \times \frac{100}{10} \times \frac{105}{10}$

$= \frac{\pi \times 100 \times 10{,}5}{4}$

$= 825\ cm^2$

CR $= \frac{SV + CV}{CV}$

$= \frac{825 + 110}{110}$

$= 8{,}5:1$ (5)

7.2
- Leaking cylinder head gasket
- Loose cylinder head bolts
- Cracked cylinder head
- Broken or perforated piston
- Worn or broken piston rings
- Leaking valves and valve seats
- Faulty valve adjustments
- Carbon deposits in valve ports
- Blocked exhaust system
- Blocked air filter

Any 1x1=(1)

TOTAL FOR SECTION B: [100]

TOTAL: 200

GAUTENGSE DEPARTEMENT VAN ONDERWYS

SENIORSERTIFIKAAT-EKSAMEN

MOONTLIKE ANTWOORDE VIR : MOTORWERKTUIGKUNDE SG

LET WEL: Enige ander korrekte antwood wat nie in die memorandum genoem word nie, mag as korrek aanvaar word.

AFDELING A
VRAAG 1

1.1	B – te veel negatiewe wielvlug.	(2)
1.2	C – omskep wisselstroom na gelykstroom.	(2)
1.3	A – Volumetriese doeltreffendheid.	(2)
1.4	D – kragbalans	(2)
1.5	A – stator	(2)
1.6	B – 1,3,4,2	(2)
1.7	B – 60°	(2)
1.8	A – die loodlyn en die hartlyn van die wiel soos van voor gesien.	(2)
1.9	C – Die hoeveelheid brandstof wat ingespuit word.	(2)
1.10	B – elektriese skakelaar.	(2)
1.11	• Onderbreek basisstroom met behulp van kontakpunte • Onderbreek basisstroom met behulp van teenstroom.	2x1=(2)
1.12	• Massa van suier • Veerspanning	1x2=(2)
1.13	• skermbril – slypwerk • skermbril – boorwerk • skermbril – onder motor • skermbril – saamgeperste lug • bril met donker lense – sweiswerk	2x1=(2)
1.14	• Hou brandbare vloeistowwe in kanne met sluitproppe. • Nie in werkwinkel rook nie. • Verwyder brandstoftenk vir sweiswerk naby. • Brandblusser altyd byderhand wanneer daar gesweis word. • Olielappe en vuil klere wat vol olie of brandstof is, mag nie rondlê nie.	3x1=(3)
1.15	1,2,4,5,3	(2)

1.16
1.16.1

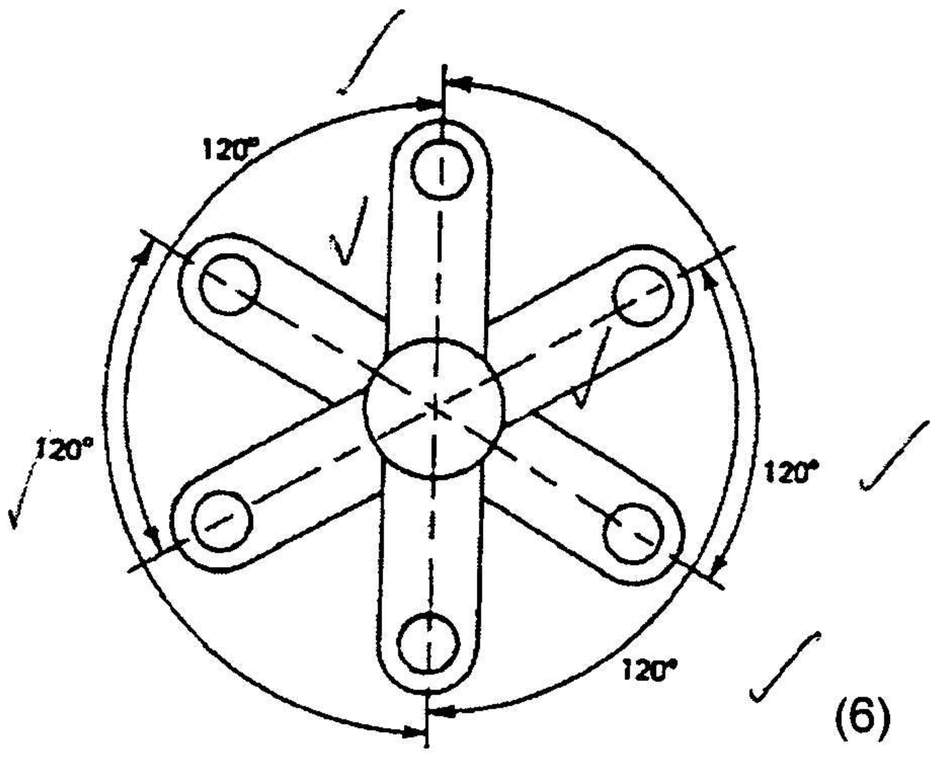

(6)

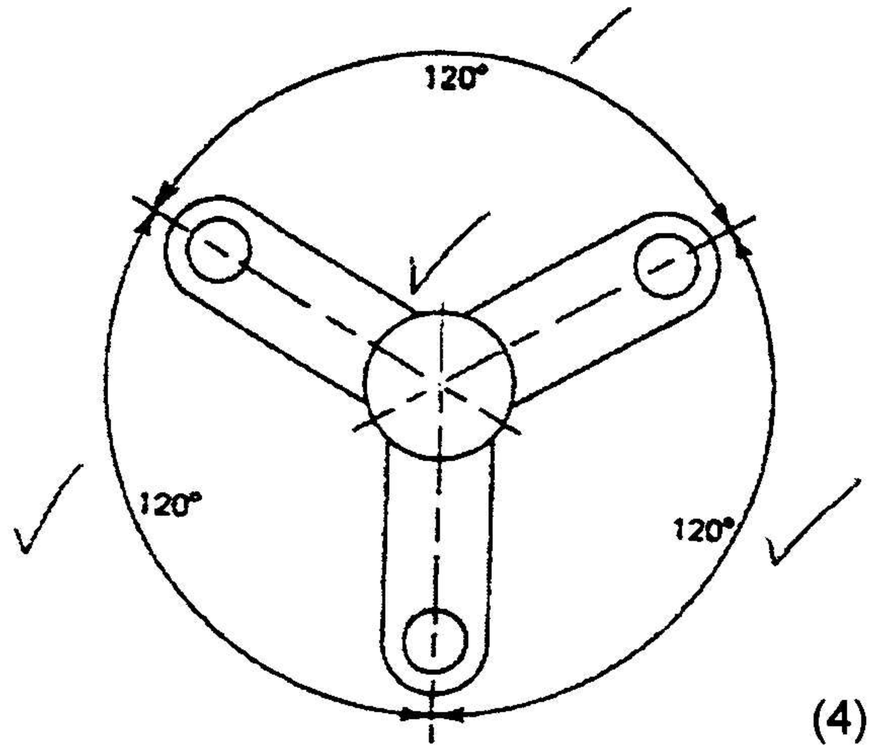

(4)

Een regmerk = 1 punt

1.17 $$MD = \frac{RD}{AD} \times 100$$

$$= \frac{30}{40} \times 100$$

= 75 % (4)

1.18

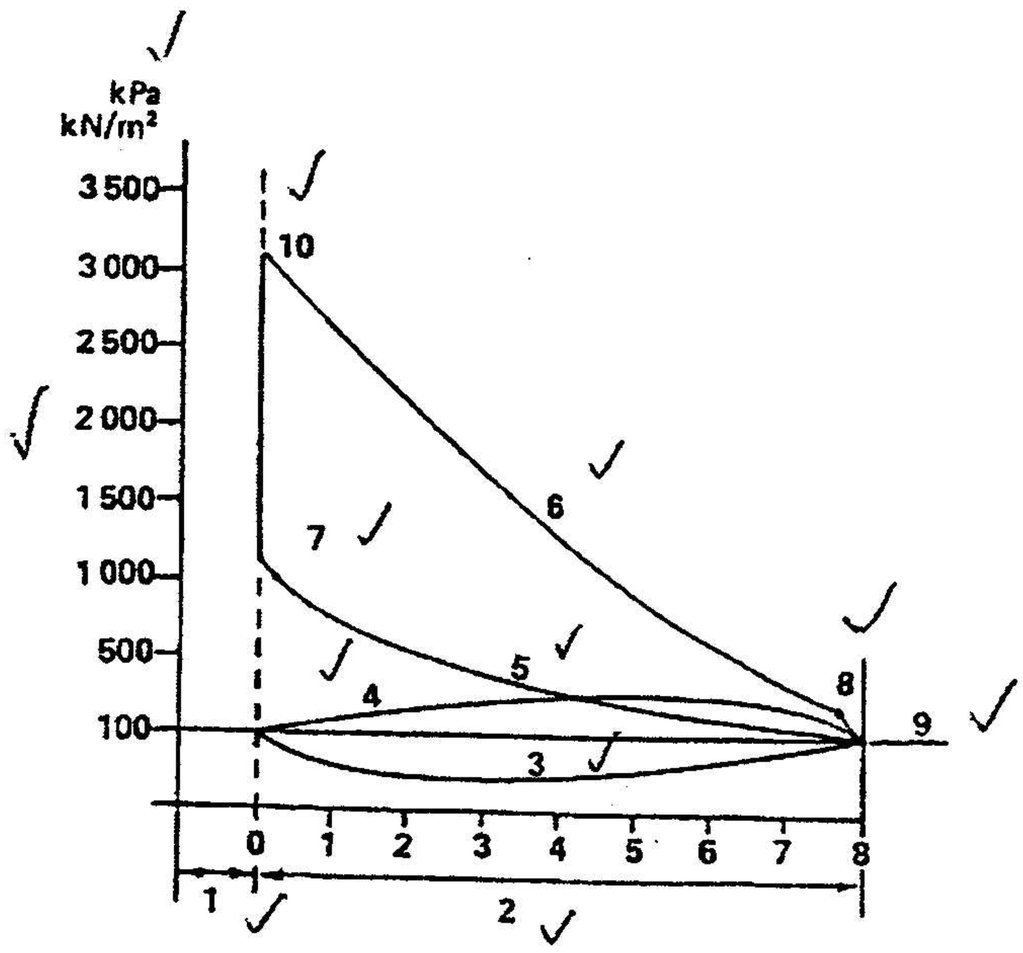

Een regmerk = 1 punt (12)

1.19 T = F x afstand

$= 150 \times \frac{220}{1000}$

= 32,3 Nm

F = m x a
= 15 x 9.8
= 147 N

Een regmerk = 1 punt (4)

1.20

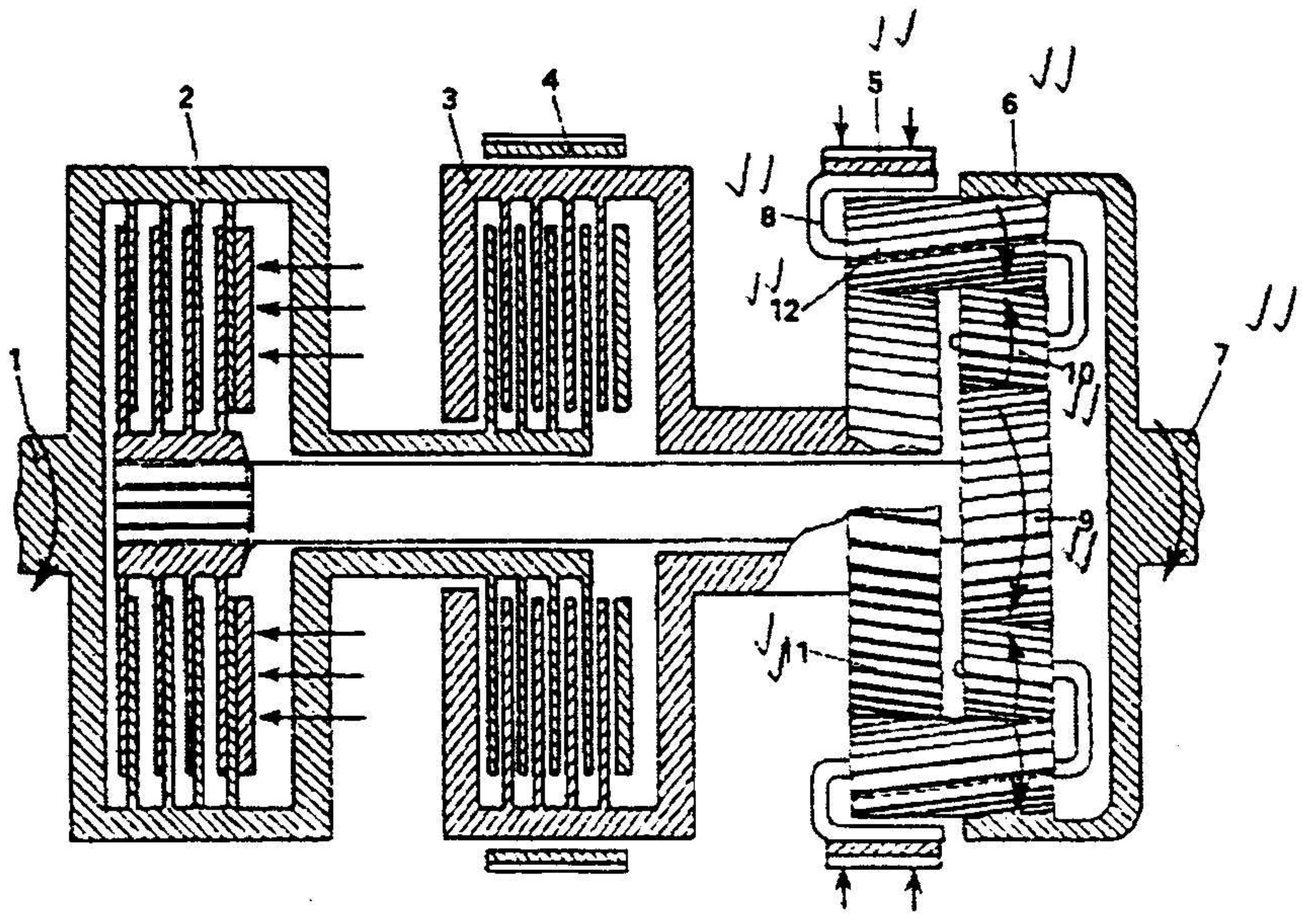

Een regmerk = 1 punt (16)

1.20.1
(A) sekondêre naafrat. (2)
(B) voorste koppelaar (2)

1.20.2
(A) sekondêre naafrat (2)
(B) planeetratraam (2)

1.21

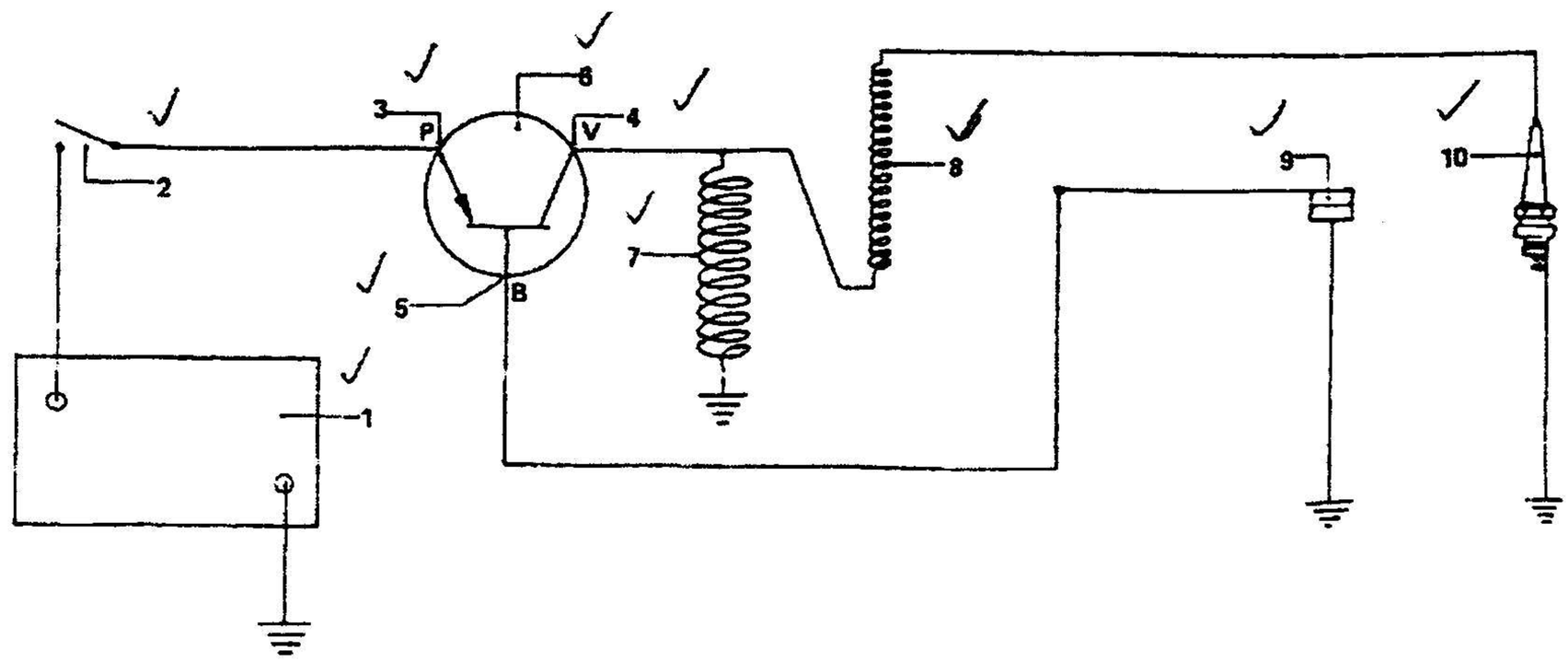

Een regmerk = 1 punt (10)

1.22
- skakelaar
- transistor
- kontakpunte
- primêre spoel
- akkumulator 3x1=(3)

1.23
- vonkprop
- sekondêre spoel
- vonkpropdrade
- klos
- rotor 2x1=(2)

TOTAAL VIR AFDELING A: [100]

AFDELING B
VRAAG 2

2.1	2.1.1	**1**	–	leweringspomp	(1)
		2	–	luglaatpomp	(1)
		3	–	sekondêre filter	(1)
		4	–	primêre filter	(1)
		5	–	terugvloeipyp	(1)
	2.1.2	**1**	–	Verskaf brandstof teen lae druk aan inspuitpomp.	(1)
		2	–	Word gebruik om brandstofsisteem te bloei.	(1)

2.2
- Elke silinder ontvang 'n presies afgemete hoeveelheid brandstof.
- Lug/brandstofverhouding bly feitlik onveranderd teen lae en hoë enjinsnelhede.
- Inlaatspuit laat lug vrylik instroom wat volumetriese doeltreffendheid verhoog.
- Lugleegtes word uitgeskakel.
- Ysvorming in inlaatspruit is gering. 3x1=(3)

2.3
- Suiertipe (1)
- Diafragmatipe (1)

2.4
- Eenvoudige ontwerp met minder bewegende dele wat kan slyt.
- Veranderbare venturi-opening verskaf konstante lugvloeitempo en drukverskil in venturi wat korrekte lug/brandstofverhoudings verseker.
- Verhoog volumetriese doeltreffendheid.
- Slegs een sproeier word gebruik.
- Geen ingewikkelde kompenseerstelsel nie. 5x1=(5)

2.5

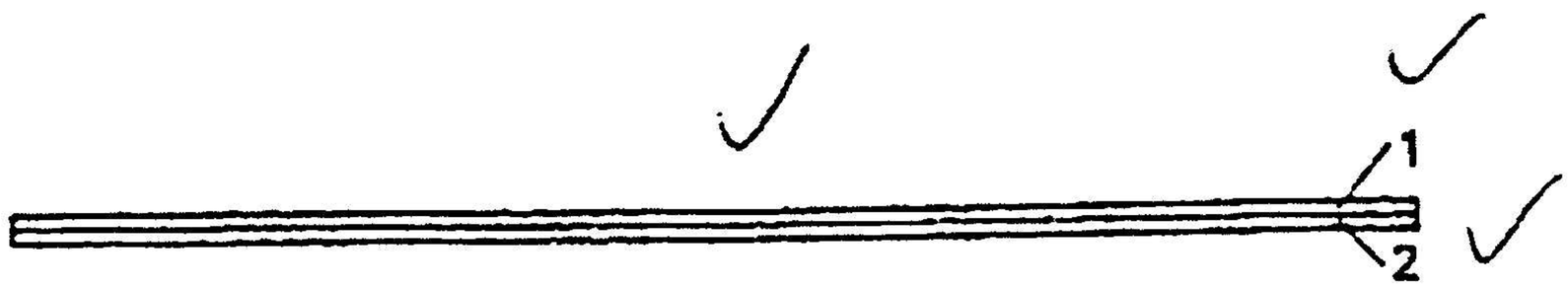

1 – staal (3)
2 – koper **[20]**

VRAAG 3

3.1

3.1.1 Eweredige verspreiding van al die gewig rondom die rotasie-as in die rotasievlak. (2)

3.1.2 Eweredige verspreiding van al die gewig rondom die rotasie-as in alle rotasievlakke. (2)

3.2
- Ondersoek toestand van bande.
- Bande moet dieselfde grootte wees en dieselfde slytasie toon.
- Dwarslaag mag nooit saam met straallaagbande gebruik word nie.
- Banddruk moet dieselfde wees.
- Bande moet rond wees.
- Ondersoek vir bandslingering.
- Ondersoek voorwiellaers vir slytasie.
- Ondersoek stuurmeganisme.
- Ondersoek stuurkas vir abnormale speling.
- Ondersoek vere.
- Ondersoek veerskakelings.
- Ondersoek dat senterboute reg is.
- Ondersoek U-boute of dit vas is.
- Ondersoek vir vryhoogte.
- Ondersoek of raam van voertuig nie gebuig is nie.
- Ondersoek skokbrekers Enige 5 (5)

3.3
- Ondersoek stuurstelsel vir enige slytasie.
- Ondersoek veringstel en skokdempers
- Ondersoek voorwiellaers.
- Ondersoek wiele vir wielslingering.
- Bande moet rond wees.
- Ondersoek of bande ewe groot is.
- Banddruk moet dieselfde wees.
- Ondersoek bande vir ongelyke slytasie.
- Maak wiele behoorlik skoon.
- Verwyder ou balanseermassastukke — Enige 3 (3)

3.4
- Skakel die ronde beweging van die stuurwiel om na gelyktydige beweging van die voorwiele
- Verskaf hefvoordeel aan bestuurder.
- Absorbeer padskokke. — 2x1=(2)

3.5

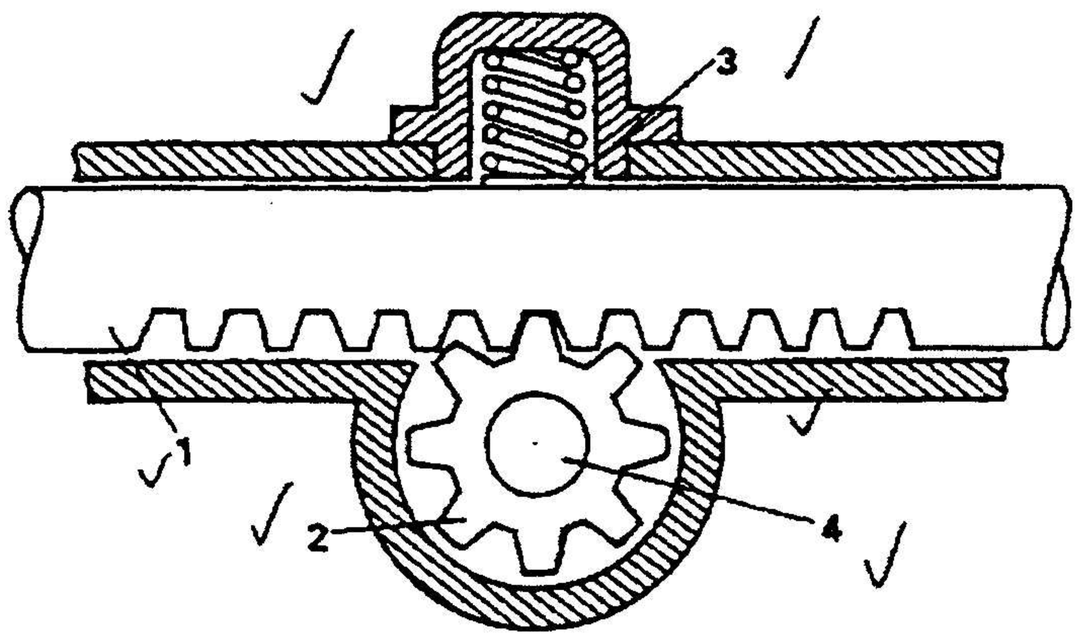

(6)

Een regmerk = 1 punt **[20]**

VRAAG 4

4.1
1 venturi (1)
2 luierstelskroef (1)
3 smoorder (1)
4 primêre keel (1)
5 sekondêre keel (1)

4.2 Twee-fasige meerkeelvergasser (1)

4.3
- Koolstof (1)
- Waterstof (1)

4.4 Om ru-olie te rafinieer in verskillende fraksies. (2)

4.5

4.5.1 Die geredelikheid waarmee 'n brandstof vanaf 'n vloeistof in 'n damp omskep kan word. 3x1=(3)

4.5.2 Wanneer die lug/brandstofmengsel ontsteek word op enige ander manier behalwe deur die vonk tussen die vonkpropelektrodes. 2x1=(2)

4.6 Hameraksie op suier, gebreekte suierringe, laers wat slyt, blaas olie van silinderwande af en koolstofneerslae in smeerolie. 5x1=(5)
[20]

VRAAG 5

5.1
1 Pompnokas
2 Massadraraam
3 Kniehefboom
4 Vliegmassa
5 Spilpenne
6 Skuifbare huls
7 Drukveer
8 Skuifbare kraagring (8)

5.2 No. 4 – vliegmassa (2)

5.3 Beheer die enjinspoed (2)

5.4
- Verkoel enjinonderdele
- Skoon lug wat in die silinder ingeblaas word, stoot uitlaatgasse uit.
- Hoër drywingsuitset word verkry.
- Meer ekonomies
- Invloed van hoogte bo seespieël minimaal. 4x1=(4)

5.5
- Hoër termiese doeltreffendheid
- Nie nodig om aanvang van inspuittyd te vervroeg nie.
- Opwarmperiode korter
- Kan sonder nadelige gevolge 40:1 brandstoflugverhouding gebruik. 4x1=(4)

[20]

VRAAG 6

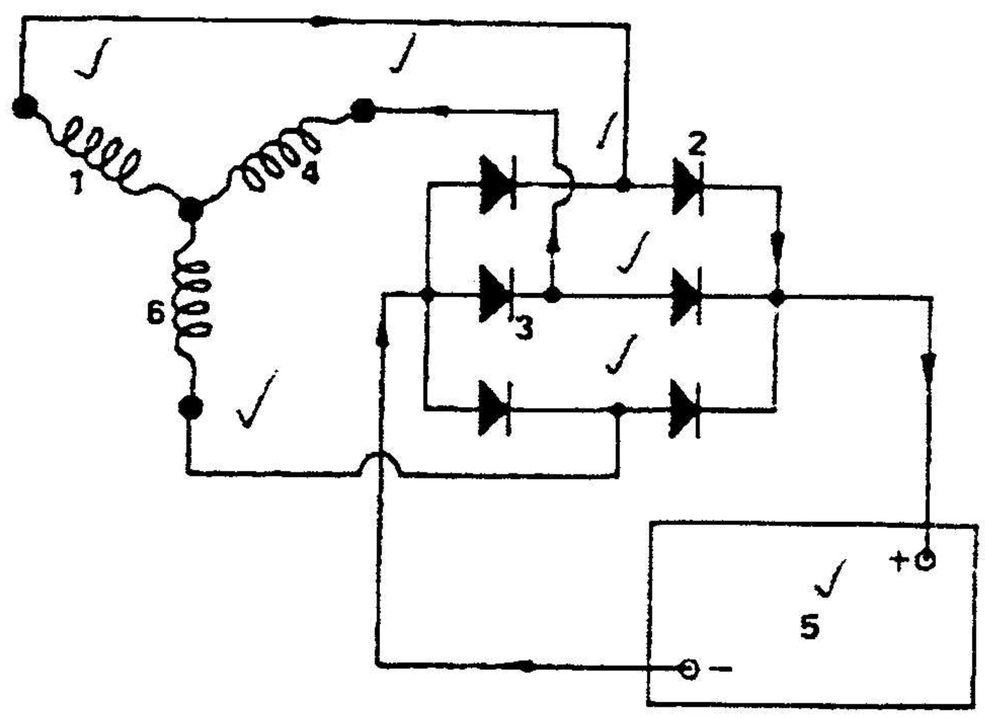

(1) Statorspoel
(2) Diode pos
(3) Diode neg
(4) Statorspoel
(5) Akkumulator
(6) Statorspoel

(8)

6.2

6.2.1 Meet stroomvloei in ampere (2)

6.2.2 ammeter (2)

6.2.3 serie (2)

6.3 parallelmotor (2)

6.4

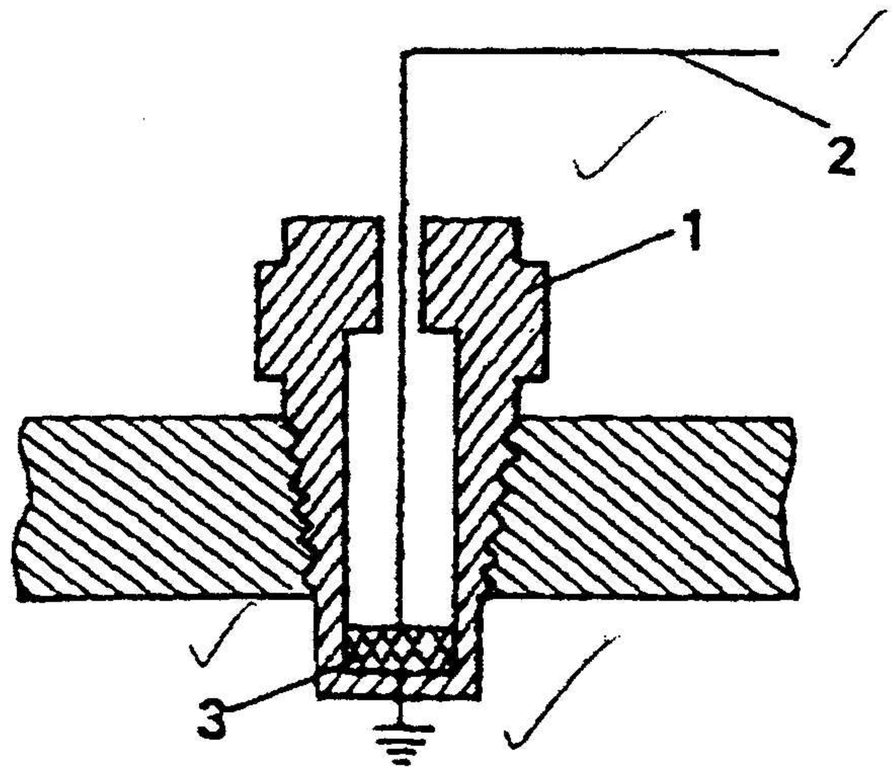

(4)
[20]

VRAAG 7

7.1.1 Area $= \frac{\pi D^2}{4}$

$= \frac{\pi}{4} \frac{100}{1000} \times \frac{100}{1000}$

$= 0{,}008\ m^2$

AD $=$ $PLAN_n$

$= 1\ 000 \times \frac{105}{1000} \times \frac{4000}{60x2} \times 6 \times 0{,}008$

$= 168$ kW (7)

7.1.2 RD $= 2\pi NT\ (2\pi NFR)$

$= 2\pi \times 225 \times \frac{1400}{1000} \times \frac{4000}{60}$

$= 131947$

$= 132$ kW (5)

7.1.3 MD $= \frac{RD}{AD} x 100$

$= \frac{132}{168} x 100$

$= 78,6\ \%$ (2)

7.1.4 SV $= \frac{\pi}{4} x \frac{100}{10} x \frac{100}{10} x \frac{105}{10}$

$= \frac{\pi x 100 x 10,5}{4}$

$= 825\ cm^2$

KV $= \frac{SV + VV}{VV}$

$= \frac{825 + 110}{110}$

$= 8,5:1$ (5)

7.2
- Silinderkoppakking wat lek
- Silinderkopboute los
- Gekraakte silinderkop
- Gat in suier
- Verslete of gebreekte suierringe
- Kleppe en klepbeddings wat lek
- Foutiewe klepspelings
- Koolstofaanpaksels in kleppoorte
- Verstopte uitlaatstelsel
- Verstopte lugfilter

Enige 1x1=(1)

TOTAAL VIR AFDELING B: [100]

TOTAAL: 200