OCR
RECOGNISING ACHIEVEMENT

**F**

**A332/01**

**GENERAL CERTIFICATE OF SECONDARY EDUCATION**
**TWENTY FIRST CENTURY SCIENCE**

# PHYSICS A

Unit 2 Modules P4 P5 P6 (Foundation Tier)

**SAMPLE ASSESSMENT MATERIAL**
**(from 2010 onwards)**

Time: 40 minutes

Candidates answer on the question paper
**Additional materials (enclosed):**
None

Calculators may be used.
**Additional materials:** Pencil
Ruler (cm/mm)

| | | | |
|---|---|---|---|
| Candidate Forename | | Candidate Surname | |
| Centre Number | | Candidate Number | |

**INSTRUCTIONS TO CANDIDATES**

- Write your name in capital letters, your Centre Number and Candidate Number in the boxes above.
- Use black ink. Pencil may be used for graphs and diagrams only.
- Read each question carefully and make sure you know what you have to do before starting your answer.
- Answer **all** the questions.
- Do **not** write in the bar codes.
- Do **not** write outside the box bordering each page.
- Write your answer to each question in the space provided.

**INFORMATION FOR CANDIDATES**

- The number of marks for each question is given in brackets [ ] at the end of each question or part question.
- The total number of marks for this paper is **42**.
- A list of physics equations is printed on page two.

| FOR EXAMINER'S USE | | |
|---|---|---|
| **Qu.** | **Max.** | **Mark** |
| 1 | 5 | |
| 2 | 4 | |
| 3 | 4 | |
| 4 | 4 | |
| 5 | 4 | |
| 6 | 2 | |
| 7 | 4 | |
| 8 | 4 | |
| 9 | 4 | |
| 10 | 3 | |
| 11 | 4 | |
| TOTAL | 42 | |

This document consists of **16** printed pages.


© OCR 2009 [D/103/3794] OCR is an exempt Charity


© OCR 2009

# TWENTY FIRST CENTURY SCIENCE EQUATIONS

## Useful Relationships

### Explaining Motion

$$\text{speed} = \frac{\text{distance travelled}}{\text{time taken}}$$

momentum = mass x velocity

change of momentum = resultant force x time for which it acts

work done by a force = force x distance moved by the force

change in energy = work done

change in GPE = weight x vertical height difference

kinetic energy = ½ x mass x $[\text{velocity}]^2$

### Electric Circuits

$$\text{resistance} = \frac{\text{voltage}}{\text{current}}$$

$$\frac{\text{Voltage across primary coil}}{\text{Voltage across secondary coil}} = \frac{\text{Number of turns in primary coil}}{\text{Number of turns in secondary coil}}$$

energy transferred = power x time

power = potential difference x current

$$\text{efficiency} = \frac{\text{energy usefully transferred}}{\text{total energy supplied}} \times 100\%$$

### The Wave Model of Radiation

wave speed = frequency x wavelength

© OCR 2009

Answer **all** the questions.

**1** Dan goes to buy a newspaper for his granddad in the morning. He walks in a straight line to the shop and back.

**(a)** The graph shows the distance Dan is from home and the time it takes.

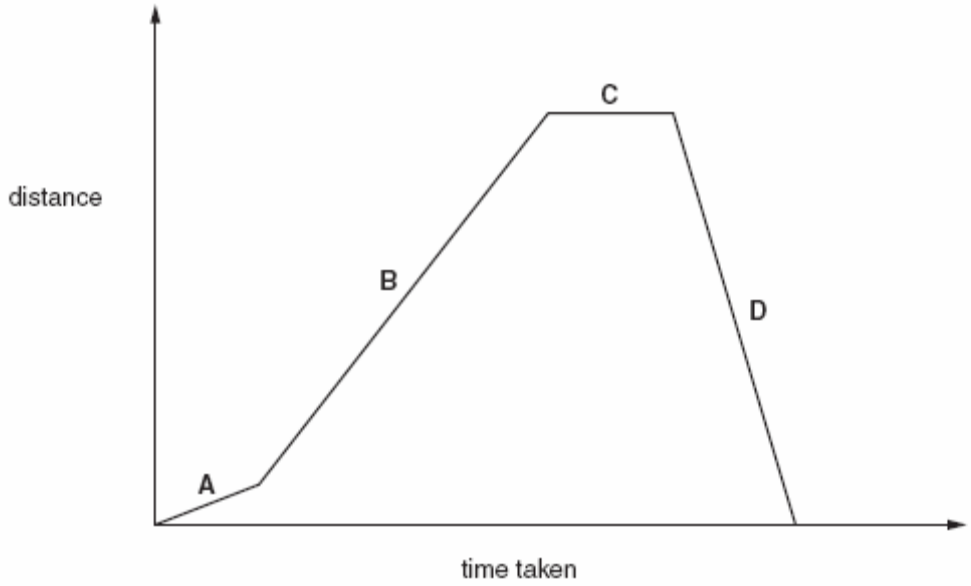


Complete the table below.

Each letter may be used once, more than once or not at all.

| **what Dan is doing** | **Part of the graph (A, B C** or **D)** |
|---|---|
| standing still | |
| walking at his fastest speed | |
| walking with a negative velocity | |

**[3]**

© OCR 2009

**(b)** Dan is walking, so he has momentum.

The equation linking momentum, mass and velocity is:

**momentum = mass × velocity**

Dan has a mass of 60 kg.

At one time his velocity is 2 m / s.

Calculate Dan's momentum. Show your working

momentum = ..... kg m / s **[2]**

**[Total: 5]**

© OCR 2009

**2** Bobby is playing with a ball.

**(a)** Complete the following sentences.

Choose words from this list.

**distance**

**mass**

**muscle**

**weight**

Bobby lifts the ball above his head.

The force acting downwards on the ball is ..... .

To calculate the work done by Bobby in lifting the ball you must multiply the force by the

..... . **[2]**

**(b)** Bobby lets the ball fall to the ground.

Describe the energy change as the ball falls to the ground.

.....

.....

..... **[2]**

**[Total: 4]**

© OCR 2009

**3** A driver in a car experiences forces in different directions as he drives forwards.

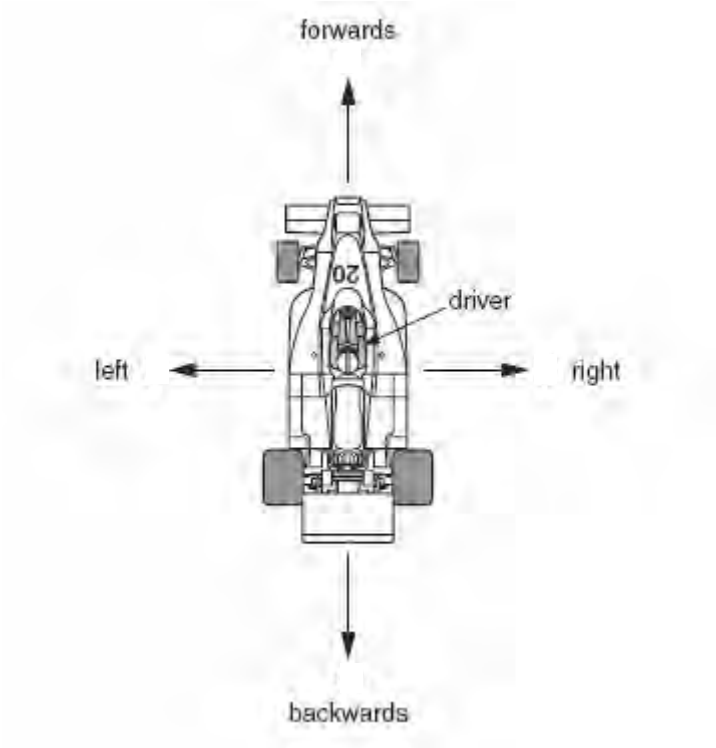


**(a)** Describe the forces acting on the driver as the car slows down **and** turns left at the same time.

.....

.....

..... **[2]**

**(b)** When the car speeds up in a straight line the driver and the car exert forces on each other.

Describe these forces.

.....

.....

..... **[2]**

**[Total: 4]**

© OCR 2009

**4** Here are some circuit symbols for electrical components.


This circuit uses some of the components.

Write the **letter** for each component symbol in the correct box in the circuit.

One has been done for you.

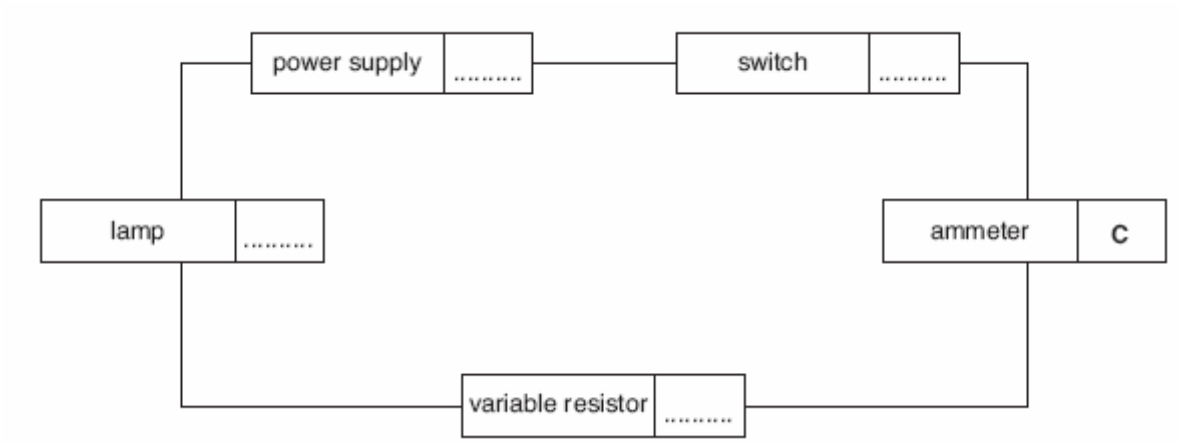


**[4]**

**[Total: 4]**

© OCR 2009

**5** The most commonly used model of electric circuits uses ideas about current and electrons.

Complete the sentences. Choose statements from this list.

**a flow of charge**

**a repulsive force**

**a continuous loop**

**an attractive force**

**a negative charge**

**(a)** An electron has ..... . **[1]**

**(b)** In a circuit the electrons move in ..... . **[1]**

**(c)** Electric current is ..... . **[1]**

**(d)** Two negative charges are pushed apart by ..... . **[1]**

**[Total: 4]**

© OCR 2009

**6** This question is about making measurements in an electric circuit.

Here are three circuits.

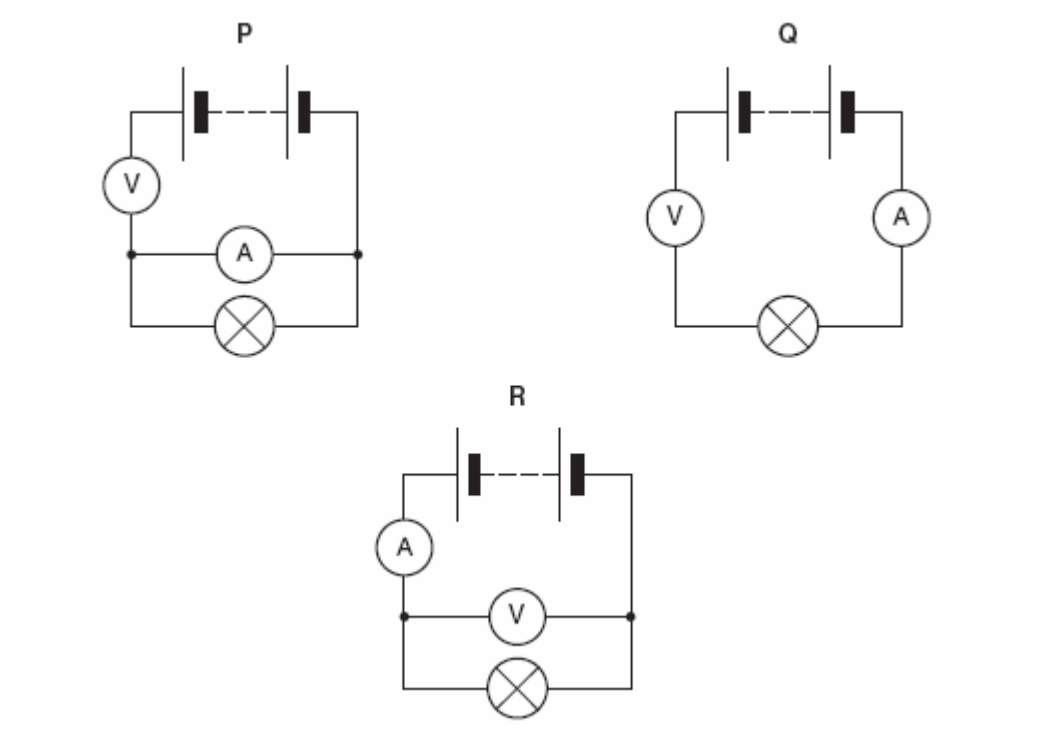


**(a)** Which circuit, **P**, **Q** or **R**, is correct for measuring the current through the lamp and the voltage across the lamp?

answer ..... **[1]**

**(b)** Put a ring around the word which means the same as potential difference.

**charge** **current** **power** **voltage**

**[1]**

**[Total: 2]**

© OCR 2009

**7** Electricity can be generated by moving a magnet in a coil of wire.

The diagram shows a magnet held above a coil of wire.

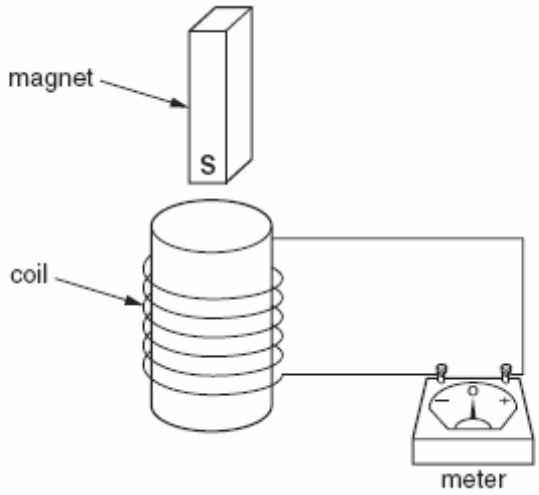


Experiments with this apparatus can show how the electricity is generated.

**(a)** Draw a straight line from each experiment to what happens on the meter.

The first line has been done for you.

| experiment | what happens on the meter |
|---|---|
| push the South end of the magnet into the coil | needle flicks to right |
| pull the South end of the magnet out of the coil | needle does not move |
| push the North end of the magnet into the coil | needle flicks to left |
| hold the magnet still in the coil | |

**[3]**

© OCR 2009

**(b)** What is the name for this method of producing a voltage?

Put a ring around the correct answer

**deduction** **induction** **reduction** **transformation**

**[1]**

**[Total: 4]**

© OCR 2009

**8** Water waves and sound waves are different.

**(a)** This is a diagram of a water wave.

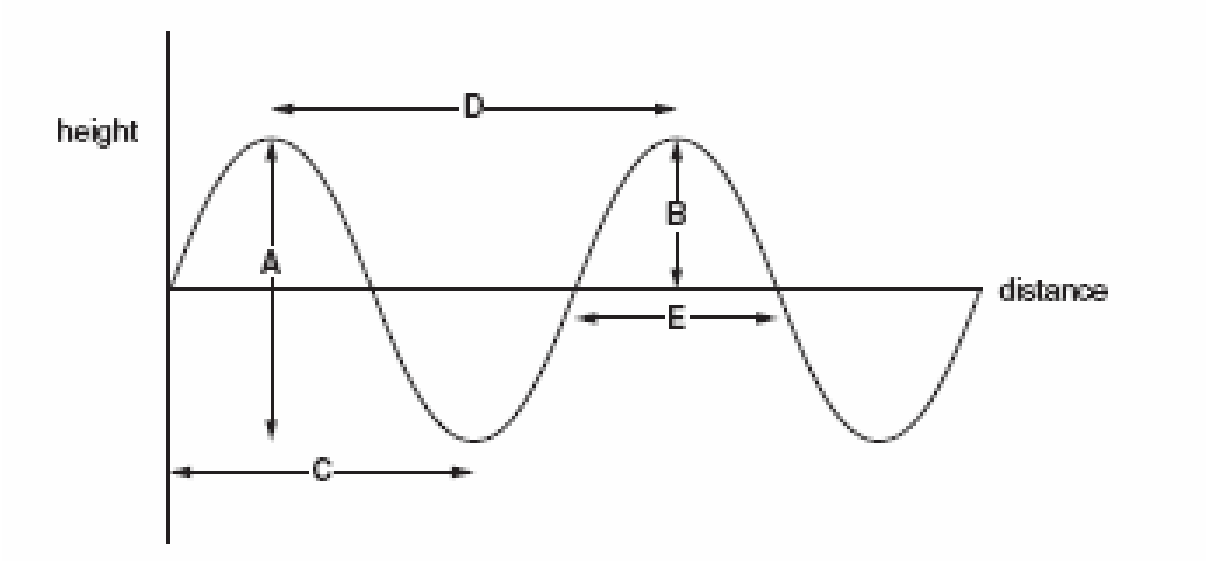


**(i)** Which letter, **A**, **B**, **C**, **D** or **E**, shows the amplitude of the wave?

answer..... **[1]**

**(ii)** Which letter, **A, B, C, D** or **E**, shows the wavelength of the wave?

answer..... **[1]**

**(b)** Some water waves are transverse waves.

Another type of wave is a longitudinal wave.

What is the difference between transverse and longitudinal waves?

Your answer should include;

- how a particle moves
- an example of a longitudinal wave.

.....

.....

.....

.....

..... **[2]**

**[Total: 4]**

© OCR 2009

**9** Susan is experimenting with water waves in a ripple tank.

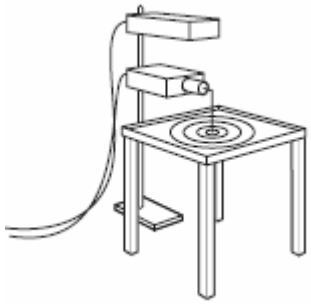

She draws some diagrams to show different wave properties.

**reflection**

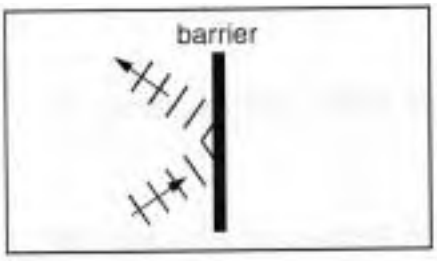


**interference**

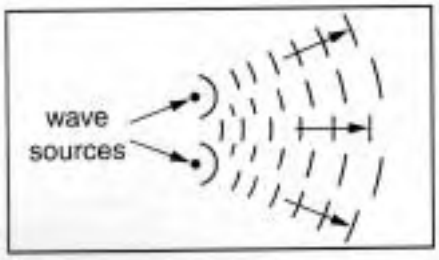


**Complete** the diagrams below for refraction and diffraction.

**refraction**

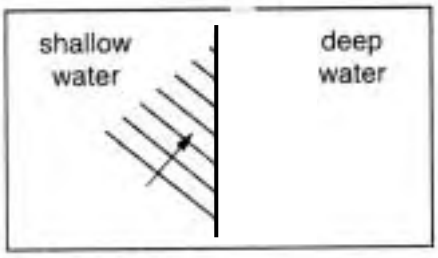


**diffraction**

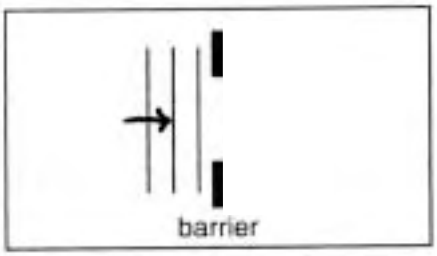


**[4]**

**[Total: 4]**

© OCR 2009

**10** Information can be sent using analogue or digital signals.

Sometimes the signals pick up noise.

Here are four different signals.

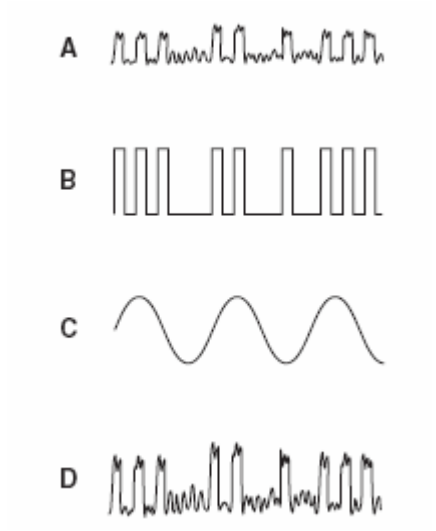


Explain the meanings of **analogue** and **digital** signals and **noise**.

Refer to the signal diagrams **A**, **B**, **C** and **D**, in your answers.

.....

.....

.....

.....

.....

.....

..... **[3]**

**[Total: 3]**

© OCR 2009

**11** Here are different parts of the electromagnetic spectrum.

**gamma radiation**

**infrared**

**microwaves**

**radio waves**

**ultraviolet**

**visible light**

**X-rays**

**(a)** Put the parts of the electromagnetic spectrum in order of **increasing wavelength**.

The first one has been done for you.

| | |
|---|---|
| shortest wavelength | **gamma radiation** |
| | |
| | |
| | |
| | |
| | |
| longest wavelength | |

**[3]**

**(b)** Photons with the highest frequency have the most energy.

Write down the name of the part of the spectrum that has photons with the most energy.

answer ..... **[1]**

**[Total: 4]**

**END OF QUESTION PAPER**

© OCR 2009

Permission to reproduce items where third-party owned material protected by copyright is included has been sought and cleared where possible. Every reasonable effort has been made by the publisher (OCR) to trace copyright holders, but if any items requiring clearance have unwittingly been included, the publisher will be pleased to make amends at the earliest possible opportunity.

OCR is part of the Cambridge Assessment Group. Cambridge Assessment is the brand name of University of Cambridge Local Examinations Syndicate (UCLES), which is itself a department of the University of Cambridge.

© OCR 2009

# CONFIDENTIAL

GCSE Unit

MARK SCHEME

SAMPLE ASSESSMENT MATERIAL
(from 2010 onwards)

**Physics A (J635)**
**Modules P4, P5 and P6**
**Foundation Tier**

**A332/01**

Maximum Mark: 42

© OCR 2009

## Guidance for Examiners

Additional Guidance within any mark scheme takes precedence over the following guidance.

1. Mark strictly to the mark scheme.
2. Make no deductions for wrong work after an acceptable answer unless the mark scheme says otherwise.
3. Accept any clear, unambiguous response which is correct, e.g. mis-spellings if phonetically correct (but check additional guidance).
4. Abbreviations, annotations and conventions used in the detailed mark scheme:

| | | |
|---|---|---|
| / | = | alternative and acceptable answers for the same marking point |
| (1) | = | separates marking points |
| **not/reject** | = | answers which are not worthy of credit |
| **ignore** | = | statements which are irrelevant - applies to neutral answers |
| **allow/accept** | = | answers that can be accepted |
| (words) | = | words which are not essential to gain credit |
| <u>words</u> | = | underlined words must be present in answer to score a mark |
| ecf | = | error carried forward |
| AW/owtte | = | alternative wording |
| ORA | = | or reverse argument |

E.g. mark scheme shows ‘work done in lifting / (change in) gravitational potential energy’ (1)

work done = 0 marks
work done lifting = 1 mark
change in potential energy = 0 marks
gravitational potential energy = 1 mark

5. If a candidate alters his/her response, examiners should accept the alteration.
6. Crossed out answers should be considered only if no other response has been made. When marking crossed out responses, accept correct answers which are clear and unambiguous.
7. The list principle:
   If a list of responses greater than the number requested is given, work through the list from the beginning. Award one mark for each correct response, ignore any neutral response, and deduct one mark for any incorrect response, e.g. one which has an error of science. If the number of incorrect responses is equal to or greater than the number of correct responses, no marks are awarded. A neutral response is correct but irrelevant to the question.

© OCR 2009

8. Marking method for tick boxes:

Always check the additional guidance.

If there is a set of boxes, some of which should be ticked and others left empty, then judge the entire set of boxes.
If there is at least one tick, ignore crosses. If there are no ticks, accept clear, unambiguous indications, e.g. shading or crosses.
Credit should be given for each box correctly ticked. If more boxes are ticked than there are correct answers, then deduct one mark for each additional tick. Candidates cannot score less than zero marks.

E.g. If a question requires candidates to identify a city in England, then in the boxes

| | |
|---|---|
| Edinburgh | |
| Manchester | |
| Paris | |
| Southampton | |

the second and fourth boxes should have ticks (or other clear indication of choice) and the first and third <u>should be blank</u> (or have indication of choice crossed out).

| | | | | | | | | | | |
|---|---|---|---|---|---|---|---|---|---|---|
| Edinburgh | | | ✓ | | | ✓ | ✓ | ✓ | ✓ | |
| Manchester | ✓ | × | ✓ | ✓ | ✓ | | | | ✓ | |
| Paris | | | | ✓ | ✓ | | ✓ | ✓ | ✓ | |
| Southampton | ✓ | × | | ✓ | | ✓ | ✓ | | ✓ | |
| Score: | 2 | 2 | 1 | 1 | 1 | 1 | 0 | 0 | 0 | NR |

© OCR 2009

| Question | | | Expected Answers | Marks | Rationale |
|---|---|---|---|---|---|
| 1 | a | | <table><tr><td></td><td>part of the graph</td></tr><tr><td>standing still</td><td>C</td></tr><tr><td>walking</td><td>D</td></tr><tr><td>negative velocity</td><td>D</td></tr></table> (1)<br>(1)<br>(1) | 3 | |
| | b | | substitution : 60 x 2 (1)<br>calculation : 120 (1) | 2 | award 2 marks for correct numerical answer |
| | | | **Total** | **5** | |

| Question | | | Expected Answers | Marks | Rationale |
|---|---|---|---|---|---|
| 2 | | | weight; (1)<br><br>distance; (1) | 2 | |
| | | | gravitational potential energy;<br><br>**to** kinetic energy; | 2 | note: direction must be correct for two marks |
| | | | **Total** | **4** | |

| Question | | | Expected Answers | Marks | Rationale |
|---|---|---|---|---|---|
| 3 | a | | Forces on driver are backwards;<br>and left; | 2 | |
| | b | | forces are equal (in size);<br>and opposite in direction;<br>OR<br>forwards on car;<br>backwards on driver; | 2 | |
| | | | **Total** | **4** | |

© OCR 2009

| Question | | | Expected Answers | Marks | Rationale |
|---|---|---|---|---|---|
| **4** | | | power supply = A (1)<br>switch = B (1)<br>lamp = E (1)<br>variable resistor = F (1) | 4 | **allow** symbols if drawn correctly |
| | | | **Total** | **4** | |

| Question | | | Expected Answers | Marks | Rationale |
|---|---|---|---|---|---|
| **5** | **a** | | a negative charge (1) | 1 | Clear identification of phrase (from list) |
| | **b** | | a continuous loop (1) | 1 | Clear identification of phrase (from list) |
| | **c** | | a flow of charge (1) | 1 | Clear identification of phrase (from list) |
| | **d** | | a repulsive force (1) | 1 | Clear identification of phrase (from list) |
| | | | **Total** | **4** | |

| Question | | | Expected Answers | Marks | Rationale |
|---|---|---|---|---|---|
| **6** | **a** | | R (1) | 1 | |
| | **b** | | voltage (1) | 1 | |
| | | | **Total** | **2** | |

© OCR 2009

| Question | | | Expected Answers | Marks | Rationale |
|---|---|---|---|---|---|
| **7** | **a** | | 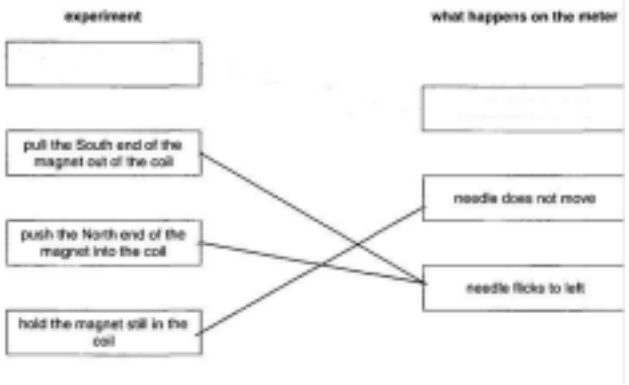 | 3 | Mark lines from left hand box<br>1 mark for each correct line<br>If two or more lines from left hand box, no mark |
| | **b** | | induction (1) | 1 | |
| | | | **Total** | **4** | |

| Question | | | Expected Answers | Marks | Rationale |
|---|---|---|---|---|---|
| **8** | **a** | **i** | B (1) | 1 | |
| | | **ii** | D (1) | 1 | |
| | **b** | | sound/p-wave (1);<br><br>transverse particles oscillate/vibrate perpendicular/orthogonal/at 90 degrees to direction of the wave.<br>longitudinal particles oscillate / vibrate in the same direction as the wave(1) | 2 | **allow** move instead of oscillate<br><br>1 mark for named example of longitudinal wave<br><br>1 mark for difference in particle movement. |
| | | | **Total** | **4** | |

© OCR 2009

| Question | | | Expected Answers | Marks | Rationale |
|---|---|---|---|---|---|
| 9 | | | **refraction**<br>wave fronts touch those drawn;<br>waves bend upwards;<br> 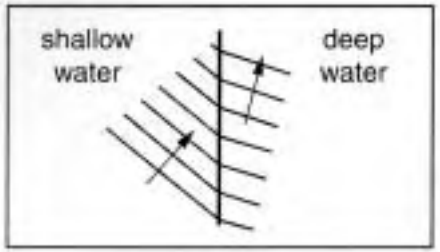 <br> | 2 | ignore wavelength |
| | | | **diffraction**<br>wavelength unchanged;<br>bends outwards at edges<br> 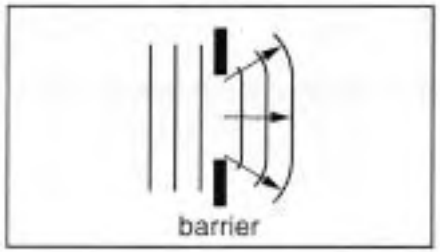 <br> | 2 | accept circular waves |
| | | | **Total** | **4** | |

| Question | | | Expected Answers | Marks | Rationale |
|---|---|---|---|---|---|
| 10 | | | digital – has two values only, (refers to diagrams A, B or D) (1)<br>analogue – many values (refers to diagram C) (1)<br>noise – additional unwanted bits / signal added (refers to diagrams A or D) (1) | 3 | must include a reference to a correct diagram for mark. |
| | | | **Total** | **3** | |

© OCR 2009

| Question | | | Expected Answers | Marks | Rationale |
|---|---|---|---|---|---|
| **11** | **a** | | (gamma radiation)<br>X-ray<br>ultraviolet<br>visible light<br>infrared<br>microwave<br>radio waves | 3 | X-ray above ultraviolet<br>Ultraviolet above visible<br>Visible above infrared<br>Infrared above microwave<br>Microwave above radio waves<br><br>5 correct (3)<br>3 or 4 correct (2)<br>1 or 2 correct (1)<br><br>accept phonetic spelling<br>accept uv for ultraviolet<br>accept ir for infrared<br>accept µwave for microwave<br>accept radio for radio waves<br>accept initial letters for each |
| | | **b** | gamma (1) | 1 | Accept phonetic spelling<br>Accept 'cosmic rays' |
| | | | **Total** | **4** | |

| | | | | | |
|---|---|---|---|---|---|
| | | | **Section total** | **42** | |

© OCR 2009