GCE AS/A Level

2410U10-1 – NEW AS

CHEMISTRY – Unit 1

The Language of Chemistry, Structure of Matter and Simple Reactions

A.M. FRIDAY, 27 May 2016

1 hour 30 minutes plus your additional time allowance

Surname _____

Other Names _____

Centre Number _____

Candidate Number 2 _____

© WJEC CBAC Ltd.

	For Examiner's use only		
	Question	Maximum Mark	Mark Awarded
Section A	1. to 7.	10	
Section B	8.	16	
	9.	11	
	10.	17	
	11.	13	
	12.	13	
	Total	80	

ADDITIONAL MATERIALS

In addition to this examination paper, you will need a:

- **calculator;**
- **DATA BOOKLET supplied by WJEC.**

INSTRUCTIONS TO CANDIDATES

Use black ink, black ball-point pen or your usual method. Do not use gel pen or correction fluid.

Write your name, centre number and candidate number in the spaces on the front cover.

SECTION A	**Answer ALL questions in the spaces provided.**
SECTION B	**Answer ALL questions in the spaces provided.**

Candidates are advised to allocate their time appropriately between SECTION A (10 MARKS) and SECTION B (70 MARKS).

INFORMATION FOR CANDIDATES

The number of marks is given in brackets at the end of each question or part-question.

The maximum mark for this paper is 80.

Your answers must be relevant and must make full use of the information given to be awarded full marks for a question.

The assessment of the quality of extended response (QER) will take place in Q.11(c).

If you run out of space, use the additional page(s) at the back of the booklet, taking care to number the question(s) correctly.

SECTION A

Answer ALL questions in the spaces provided.

1. **Using the convention of arrows to represent electrons, complete the electronic structure of an arsenic atom, As. [1]**

	3d					4s	4p		
[Ar] argon core									

2. **Give the oxidation number of molybdenum in the ion MoO_4^{2-}. [1]**

_____

3. The half-life of the radioactive isotope oxygen-15 is 2 minutes.

(a) Give the atomic number, mass number and symbol of the nuclide produced when 1 atom of ^{15}O decays by the emission of one positron. [1]

(b) If a quantity of ^{15}O decays by positron emission, determine what fraction of ^{15}O is left after 10 minutes. [1]

4. Explain why the second molar ionisation energy of sodium is greater than its first molar ionisation energy. [1]

5. The explosive ADN has the structural formula shown below.

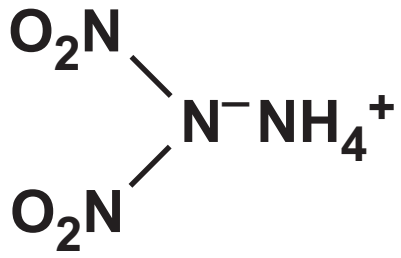

Give the empirical formula of ADN. [1]

---

6. Sodium carbonate, Na_2CO_3, is made by heating sodium hydrogencarbonate, $NaHCO_3$.

$$2NaHCO_3 \longrightarrow Na_2CO_3 + CO_2 + H_2O$$

M_r 84 M_r 106

Calculate the atom economy of this reaction. [1]

Atom economy = _____ %

7. Hydrogen and iodine react together to give hydrogen iodide.

$$H_2(g) + I_2(g) \rightleftharpoons 2HI(g)$$

(a) Write the expression for the equilibrium constant in terms of concentration, K_c, for this reaction. [1]

(b) The equilibrium constant, K_c, for this reaction has a value of 46.0 at a certain temperature. Calculate the equilibrium concentration of hydrogen at this temperature. The equilibrium concentration of iodine is 1.20 mol dm^{-3} and the equilibrium concentration of hydrogen iodide is 15.00 mol dm^{-3}. [2]

Concentration of hydrogen = _____ mol dm^{-3}

10

SECTION B

Answer ALL questions in the spaces provided.

8(a) **Iron(III) oxide, Fe_2O_3, and carbon monoxide react to give iron and carbon dioxide.**

Give the equation for this reaction. Explain why it is described as a redox process. [2]

8(b) **The iron obtained from the blast furnace contains some sulfur as an impurity. This is removed during Basic Oxygen Steelmaking (BOS), by adding magnesium, which removes the sulfur as magnesium sulfide, MgS.**

350 tonnes of impure iron used for BOS contain 0.02 % of sulfur. Calculate the mass, in KILOGRAMS, of magnesium needed to remove all the sulfur. [2]

Mass = _____ kg

8(c) **Magnesium sulfide has the same crystal structure as sodium chloride.**

Use the diagram below to show the crystal structure of magnesium sulfide, clearly labelling the formula of each species present. [2]

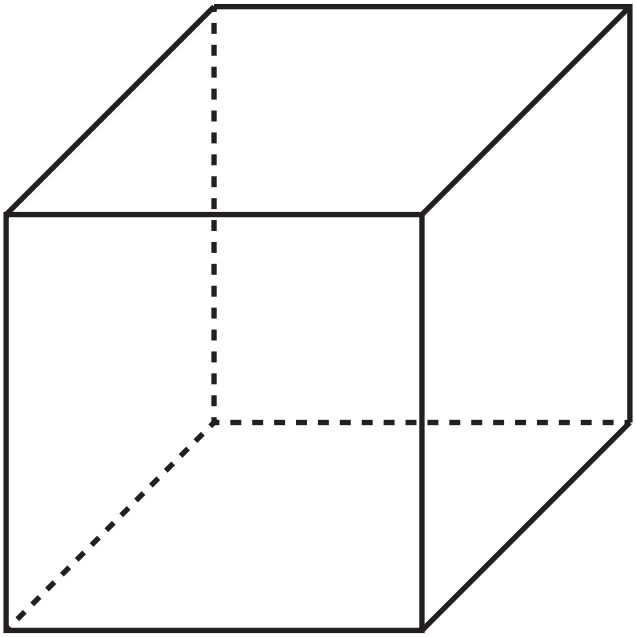

8(d) **Magnesium sulfide reacts with water producing gaseous hydrogen sulfide and magnesium hydroxide.**

$$MgS + 2H_2O \longrightarrow Mg(OH)_2 + H_2S$$

(i) **State what would be seen during the reaction apart from gas bubbles. [1]**

_____

_____

_____

_____

8(d) (ii) A student added a small sample of magnesium sulfide of mass 0.224 g to some water in a fume cupboard.

Calculate the maximum volume, in cm^3, of hydrogen sulfide produced at 25 °C. [3]

Volume = _____ cm^3

8(e) **When barium sulfide is added to water a similar reaction occurs to that described in part (d) with gaseous hydrogen sulfide and barium hydroxide being the products.**

State with a reason, how the observation for this reaction would be different from that seen with magnesium sulfide. [2]

8(f) **Barium hydroxide can also be produced by adding barium oxide to water.**

Give the equation for this reaction and estimate the pH of the product. [2]

_____

_____

_____

_____

8(g) **Explain why it is unlikely that stable compounds containing Ba^{3+} ions can exist. [2]**

16

9(a) Ethanedioic acid (oxalic acid) has the formula $(COOH)_2$.

It can be made in the laboratory by oxidising sugar with a powerful oxidising agent (shown as [O] in the equation below).

(i) Balance the equation. [1]

$$C_{12}H_{22}O_{11} + ____ [O] \longrightarrow ____ (COOH)_2 + ____ H_2O$$

9(a) (ii) After purification, the oxalic acid is produced as white crystals of a hydrate, $(COOH)_2.\ xH_2O$. On heating this hydrate, water is lost, leaving anhydrous oxalic acid.

$$(COOH)_2.\ xH_2O(s) \longrightarrow (COOH)_2(s) + xH_2O(g)$$

In an experiment 5.67 g of the hydrate were heated to constant mass, giving 4.05 g of the anhydrous acid.

Calculate the value of x in $(COOH)_2.\ xH_2O$.
You MUST show your working. [3]

x = _____

9(b) Another method of producing oxalic acid in the laboratory is to heat potassium methanoate, HCOOK. This produces potassium oxalate, which is then acidified to give the acid.

$$2HCOOK \longrightarrow (COOK)_2 + H_2$$

Some students carried out this experiment using the apparatus opposite. They collected the hydrogen gas produced over water.

A few students obtained a smaller volume of hydrogen than expected.

Suggest TWO practical reasons why this may have occurred, apart from leaks. [2]

1 _____

_____

_____

_____

2 _____

_____

_____

_____

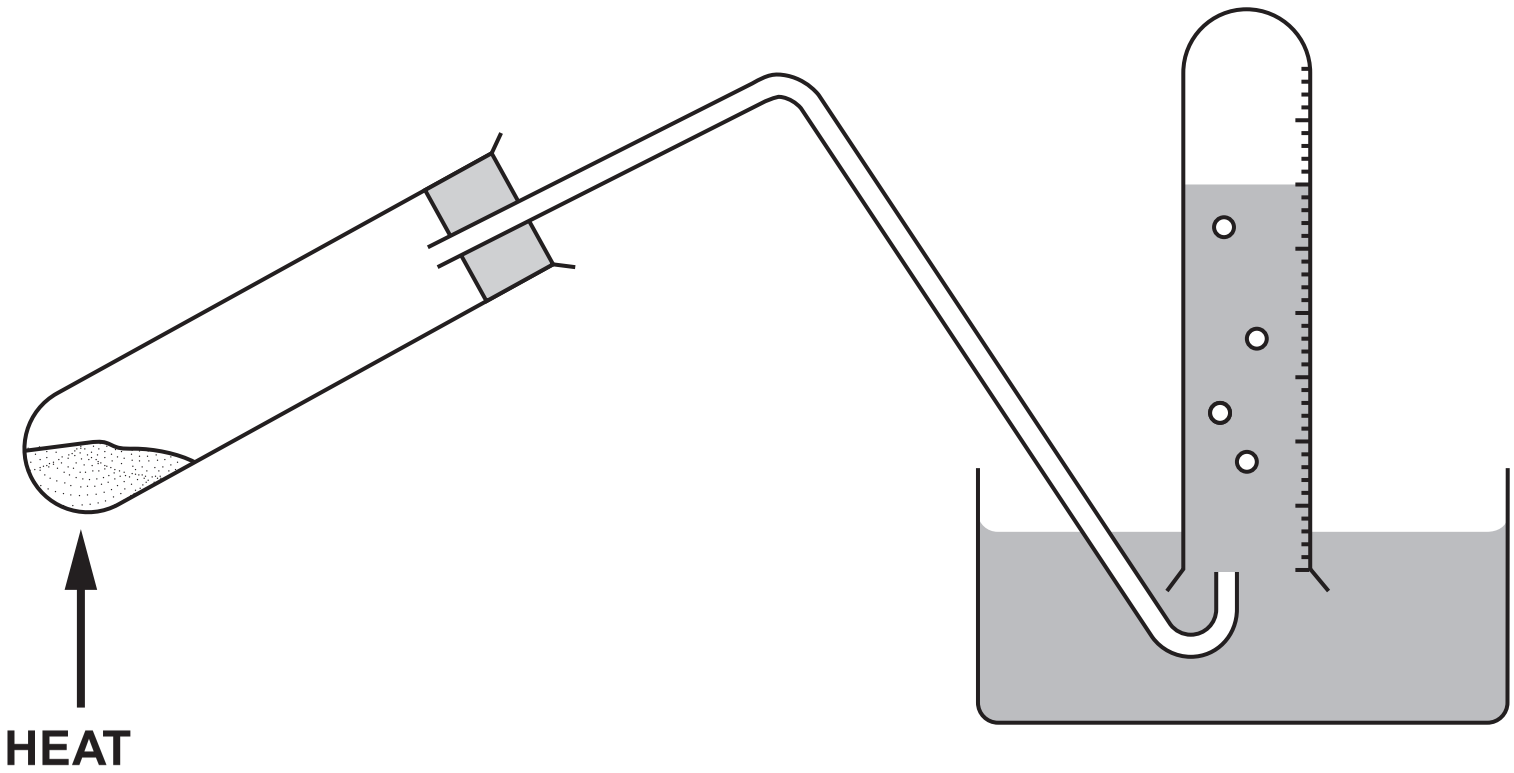
HEAT

9(c) **Gareth was asked to analyse a mixture of potassium methanoate and potassium oxalate. He weighed out 4.69 g of the mixture and carried out the method below.**

- **The mixture was completely dissolved in distilled water.**
- **Calcium chloride solution was added to this solution (only calcium oxalate was precipitated).**
- **The mixture was filtered and the precipitated calcium oxalate washed and dried.**

(i) **Suggest how Gareth would know when enough calcium chloride solution had been added to react with all of the potassium oxalate present. [2]**

_____

_____

_____

_____

_____

_____

9(c) (ii) In his experiment Gareth obtained 2.49 g of pure dry calcium oxalate (M_r 128).

$$(COOK)_2 \xrightarrow{\text{calcium chloride (aq)}} (COO)_2Ca + 2KCl$$

M_r 166 M_r 128

Calculate the percentage of potassium oxalate in the mixture, giving your answer to the appropriate number of significant figures. [3]

Percentage of potassium oxalate =

_____ %

11

10(a) The mass spectrum of a silicon sample showed the presence of the three isotopes ^{28}Si, ^{29}Si and ^{30}Si. The percentage of ^{28}Si present was 92.2 % and the mass spectrum showed that the percentage of ^{29}Si present was twice that of ^{30}Si.

Calculate the relative atomic mass of this sample of silicon. [3]

You MUST show your working.

Relative atomic mass = _____

10(b) **Rhiannon studied the properties of silicon and found that its structure is similar to that of diamond. In her report she stated that**

- **the Si–Si–Si bond angle is 109.5°**
- **silicon is a poor conductor of electricity**
- **each silicon atom is bonded to four other silicon atoms.**

(i) **State the name of the shape that has this bond angle. [1]**

_____

_____

(ii) **Explain why solid silicon is a very poor electrical conductor. [1]**

_____

_____

_____

_____

10(b) (iii) Explain why the bonding between each atom is covalent. [1]

(c) Hydrofluoric acid, HF, is supplied as a solution that contains 50 % by mass of hydrogen fluoride. The density of this solution is 1.17 g cm^{-3}.

Calculate the concentration of this solution in mol dm^{-3}. [2]

Concentration = _____ mol dm^{-3}

10(d) (i) Hydrofluoric acid will dissolve silica, SiO_2, to produce hexafluorosilicic acid.
This acid contains the SiF_6^{2-} ion.

Use the information from the table below to draw the shape of the SiF_6^{2-} ion, showing the F–Si–F bond angle. Give a reason for your answer. [3]

Ion	Number of bonding electron pairs	Number of lone electron pairs on the central silicon atom
SiF_6^{2-}	6	0

10(d) (ii) Hexafluorosilicic acid, H_2SiF_6, (M_r 144) can be added to drinking water to promote good dental health. When added to water all the fluorine in the acid is available as fluoride ions.

The water in an area of Derbyshire contains 0.15 mg dm^{-3} of fluoride ions.

Calculate how much hexafluorosilicic acid, in mg, should be added to each dm^3 of water to increase the fluoride level to 0.76 mg dm^{-3}. [3]

Mass of hexafluorosilicic acid =

_____ mg

10(e) **Solid magnesium hexafluorosilicate hydrolyses rapidly when added to water.**
One equation for this reaction is as shown on the opposite page.

In an experiment 2.60 g of magnesium hexafluorosilicate were added to 1.00 dm^3 of water.

Calculate the pH of the resulting mixture. [3]

pH = _____

17

$$MgSiF_6(s) + 2H_2O(l) \longrightarrow Mg^{2+}(aq) + 6F^-(aq) + SiO_2(s) + 4H^+(aq)$$

11(a) 2-Aminoethanol is a colourless liquid.

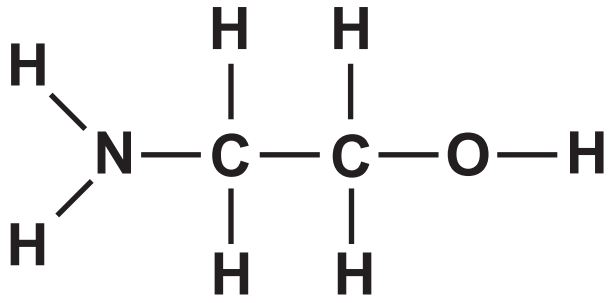

2-aminoethanol

It is very soluble in water owing to its ability to hydrogen bond with water molecules.

Complete the diagram above to show how 2-aminoethanol is able to hydrogen bond to water molecules. [4]

Compound	Formula	Boiling temperature / °C
1,2-diaminoethane	$H_2N–CH_2–CH_2–NH_2$	117
2-aminoethanol	$H_2N–CH_2–CH_2–OH$	170

11(b) **The boiling temperatures of 1,2-diaminoethane and 2-aminoethanol are shown in the table on the opposite page.**

Use these figures to comment on the strength of the intermolecular forces between the molecules in each compound suggesting reasons for your answer. [3]

11(c) **Ammonium sulfate can be prepared in the laboratory by neutralising aqueous sulfuric acid with ammonia solution in an acid-base titration.**

$$2NH_3(aq) + H_2SO_4(aq) \longrightarrow (NH_4)_2SO_4(aq)$$

Outline a method to obtain pure dry crystals of ammonium sulfate by this procedure. [6 QER]

13

12(a) Some students were given a mixture made up of about 50 % each of sodium chloride and sodium iodide and asked to design tests to show the presence and concentration of iodide ions in this mixture.

(i) One student decided to try electrolysis. He dissolved some of the mixture in distilled water to give a concentrated solution. He then passed electricity through the solution, using inert electrodes. The negative ions moved to the anode where they lost electrons.

State what was seen at the anode to confirm the presence of iodide ions. Explain your answer, including a half-equation. [3]

12(a) (ii) **Another student decided to use a chemical test. She dissolved some of the mixture in distilled water and then added a little aqueous silver nitrate. After noting what was seen, she added some aqueous ammonia to the mixture and shook it.**

State and explain what occurred during this test. [3]

_____

_____

_____

_____

_____

_____

_____

12(a) (iii) In a further test the concentration of the iodide ions present was found by a titration with potassium iodate(V) dissolved in a strong acid. 11.24 g of the mixture of sodium chloride and sodium iodide were dissolved in distilled water and made up to 250 cm^3. The iodide ions present in 25.0 cm^3 of this solution required 18.00 cm^3 of the potassium iodate(V) solution of concentration 0.100 mol dm^{-3}, to completely react.

12(a) (iii) Calculate the number of moles of iodide ions (present as sodium iodide, M_r 150) in 25.0 cm^3 of the solution and hence the exact percentage of sodium iodide in the mixture. [3]

(1 mol of potassium iodate(V) reacts with 2 mol of sodium iodide)

Percentage of sodium iodide =

_____ %

12(b) Hydrogen chloride is a colourless gas that absorbs at 278 nm in the ultraviolet region of the electromagnetic spectrum.

Use this information and the data sheet to show that the energy of the H–Cl bond is 431 kJ mol^{-1}. [2]

H–X	Bond energy / kJ mol^{-1}	Absorption maximum / nm
H–F	562	212
H–Cl	431	278
H–Br	366	326
H–I	299	400
H–At		

12(c) The table opposite shows bond energy values and absorption maxima for the hydrogen halides.

The accepted range for wavelengths for the visible region of the electromagnetic spectrum is **400-700 nm**.

Suggest and explain why it is probable that **H–At** would be a coloured gas. [2]

13

END OF PAPER

Question number	Additional page, if required. Write the question numbers in the left-hand margin.

Question number	Additional page, if required. Write the question numbers in the left-hand margin.

Question number	Additional page, if required. Write the question numbers in the left-hand margin.

Question number	Additional page, if required. Write the question numbers in the left-hand margin.